NO	DATE	REVISION	BY

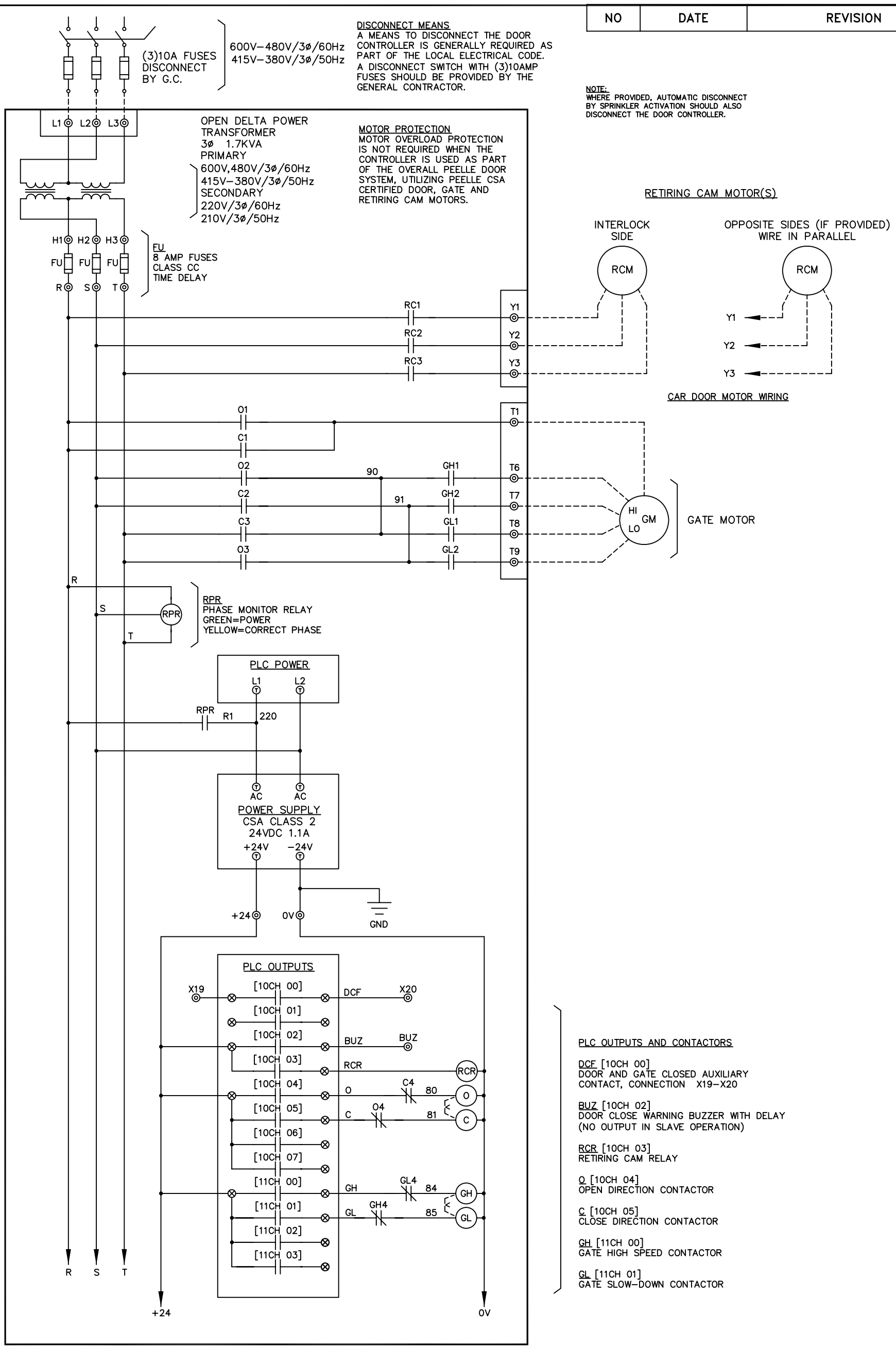

NOTES:

--------- EXTERNAL WIRE ---------

———— INTERNAL WIRE ————

1. ALL LIMIT SWITCHES AND CONTACTS SHOWN WITH NO ACTION APPLIED
2. ⓪ TERMINAL CONNECTION ON DOOR CONTROLLER
3. Ⓣ COMPONENT TERMINAL CONNECTIONS
4. ⊗ I/O TERMINAL CONNECTION ON PLC
5. CAR AND HALL PUSH BUTTONS BY OTHERS

ROUTING	
QTY	DEPARTMENT
1	ELECTRICAL
1	SUPERVISOR
1	SHOP FF
1	CUST FF

PEELLE CONTROLLER MANUFACTURED FOR NEMA 1 RATED MACHINE ROOM.

Freight Elevator Doors Since 1905
PEELLE®
We still service equipment we built 50 years ago

The Peelle Company

TITLE	REV	SCALE	SHT
GATE ONLY CONTROL 274203GO SINGLE LINE STANDARD OR SLAVE, W/O F.S.		N/A	1 OF 4

DATE		DRAWING
DRAWN BY		SD–

NO	DATE	REVISION	BY

STANDARD OR SLAVE CONTROL – DESCRIPTION

SEE ELEVATOR CONTROLLER DRAWINGS AND FOLLOW THE CORRECT PANEL TO PANEL CONNECTIONS FOR EITHER STANDARD OR SLAVE CONTROL INTERFACE. SET JUMPER FROM +24 TO STD OR SLA AS REQUIRED.

NOTE: CONTROLLER CAN NOT OPERATE IN BOTH STANDARD AND SLAVE.

STANDARD CONTROL INTERFACE – (STANDARD)
STANDARD CONTROL INTERFACE IS THE TRADITIONAL STAND–ALONE FREIGHT GATE CONTROL SUPPLIED BY PEELLE. ALL GATE DEVICES ARE WIRED DIRECTLY TO THE GATE CONTROLLER. DOOR OPEN AND CLOSE BUTTONS, LIGHT CURTAIN REVERSAL, FIRE SERVICE OPERATION, AUTOMATIC CLOSING, AND GATE LIMITS ARE ALL HANDLED BY THE GATE CONTROLLER USING THE STANDARD CONTROL INTERFACE INITIATIONS.

SLAVE CONTROL INTERFACE
SLAVE CONTROL INTERFACE IS MORE LIKE A PASSENGER GATE CONTROLLER WITH RETIRING CAM. DOOR OPEN AND CLOSE BUTTONS ARE NOT WIRED TO THE PEELLE CONTROLLER. LIGHT CURTAIN REVERSAL, FIRE SERVICE OPERATION, AND AUTOMATIC CLOSING ARE ALL HANDLED BY THE ELEVATOR CONTOLLER. GATE LIMITS IS DONE BY THE GATE CONTROLLER USING THE SLAVE CONTROL INTERFACE INITIATIONS.

[SQUARE BRACKETS] = PLC OR RELAY INDICATOR
HI = LIGHT ON, LO = LIGHT OFF

STANDARD CONTROL INTERFACE – (STANDARD)

+24–RC [0CH 00]
RETIRING CAM INITIATION
HI = LIFT CAM, LO = WHENEVER CAR IS STOPPED

ZNS–INS [0CH 01] (REMOVE PURPLE JUMPER)
INSPECTION CIRCUIT CUT–OFF
HI = DOOR OPERATION, LO = DOORS STOP

+24–DO [0CH 03]
DOOR OPEN, AUTO–OPEN INITIATION
HI (MOMENTARY) = DOOR OPEN

+24–X12 [1CH 02]
HOLD OPEN INITIATION FOR AUTO–CLOSE
HI = HOLD OPEN

+24–HDB (REMOVE PURPLE JUMPER WHEN USED)
HALL BUTTON CUT–OFF INITIATION (NOT REQUIRED)

FLOOR ZONE
FLOOR ZONE CONTACTS ARE REQUIRED BY ELEVATOR CONTROLLER FOR CONTROLLER INITIATION +24 TO 15. IF HALL BUTTONS ARE PROVIDED ADDITIONAL FLOOR ZONE CONTACTS ARE REQUIRED. SEE HALL DOOR PUSH BUTTON WIRING.

SLAVE CONTROL INTERFACE

+24–RC [0CH 00]
RETIRING CAM INITIATION
HI = LIFT CAM, LO = WHENEVER CAR IS STOPPED

+24–DO [0CH 03]
DOOR OPEN INITIATION
HI (CONSTANT) = DOOR OPEN

+24–SE [0CH 02]
GATE CLOSE SLOW SPEED (NUDGING) INITIATION
HI = SLOW SPEED, LO = NORMAL SPEED

+24–DC [0CH 09]
DOOR CLOSE INITIATION
HI (CONSTANT) = DOOR CLOSE

+24–BUZ
DOOR CLOSE WARNING BUZZER

FLOOR ZONE
FLOOR ZONE CONTACTS ARE REQUIRED BY ELEVATOR CONTROLLER FOR CONTROLLER INITIATION +24 TO 15.

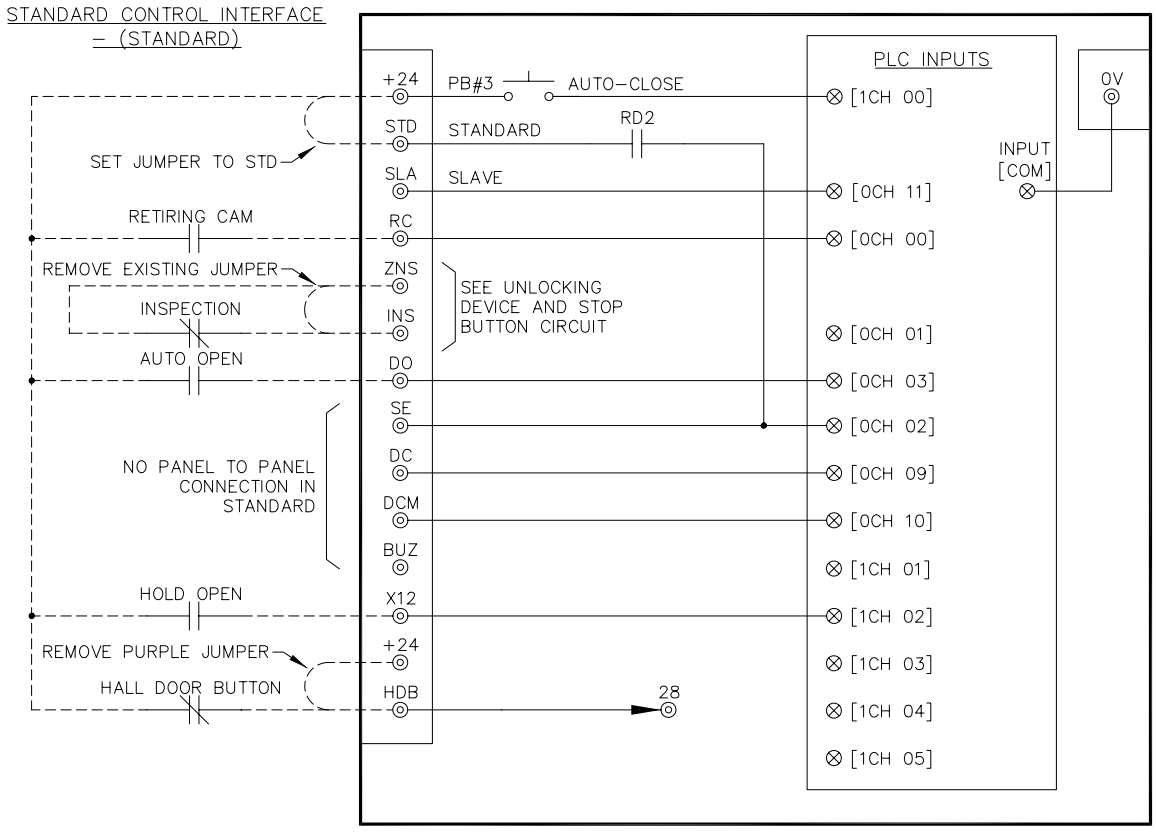

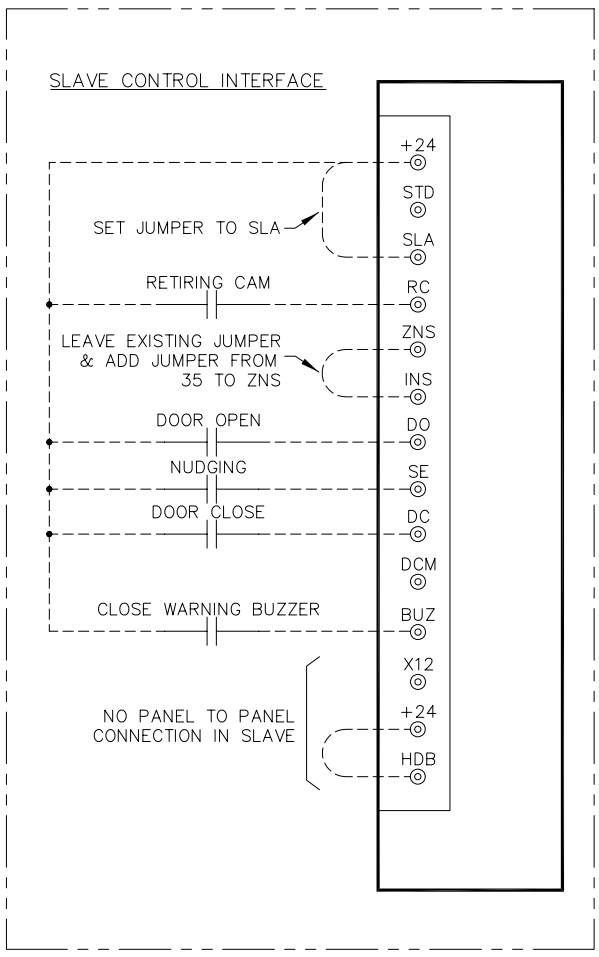

USER SETTINGS

ON/OFF (SW#1)
FOR PLC AND 24VDC POWER SUPPLY.

OPEN & CLOSE DIRECTION TIME–OUT (POT#0, POT#1)
DOOR FINAL POSITION MOTOR SHUT–OFF
POT #0 = OPEN FINAL TIME–OUT SETTING
POT #1 = CLOSE FINAL TIME–OUT SETTING
Note: Factory set to shut off motors 3 seconds after gate goes into slow–down. Should be adjusted to give enough time to open and close fully with an additional 1 second to stall.

AUTO–CLOSE (PB#3) [1CH 00]
STANDARD OPERATION ONLY!
AUTOMATIC TIME CLOSING SETTING:
1. Press and hold button for 3 seconds. Output [11CH 00] will flash once, Auto–Close will turn ON and time will be set for 30 seconds.
2. Momentarily press button PB#3 to increment the time setting:(once) 45sec, (twice) 60sec, (3x) 90sec, (4x) 2mins, (5x) 3mins, and (6x) 5mins maximum.
NOTE: You have 20 seconds to set the desired time setting after which the controller will only accept a remove command.
REMOVE AUTOMATIC CLOSING:
1. Press and hold button PB#3 for 3 seconds. Output [11CH 00] will flash twice and Automatic Closing will be removed.

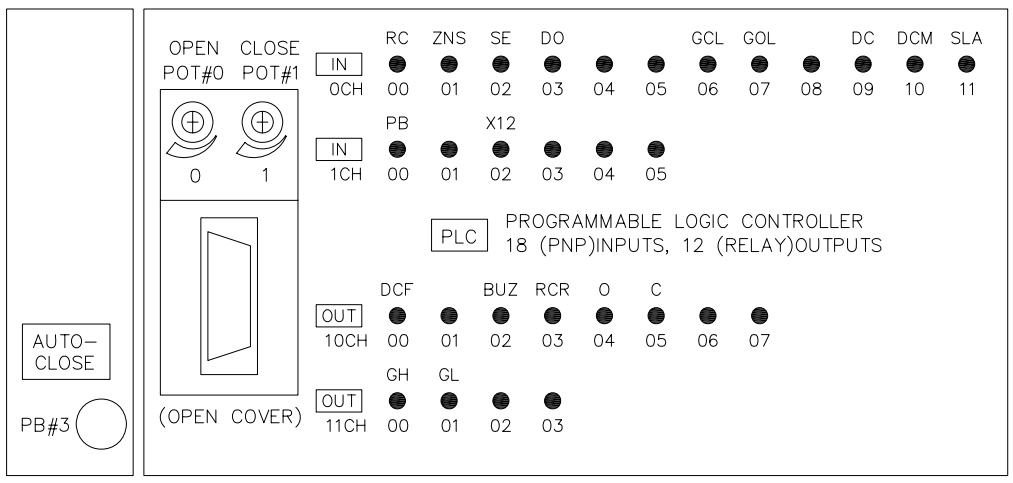

NOTES:

--------- EXTERNAL WIRE ---------

———————— INTERNAL WIRE ————————

1. ALL LIMIT SWITCHES AND CONTACTS SHOWN WITH NO ACTION APPLIED
2. ⓪ TERMINAL CONNECTION ON DOOR CONTROLLER
3. ⓣ COMPONENT TERMINAL CONNECTIONS
4. ⊗ I/O TERMINAL CONNECTION ON PLC
5. CAR AND HALL PUSH BUTTONS BY OTHERS

ROUTING	
QTY	DEPARTMENT
1	ELECTRICAL
1	SUPERVISOR
1	SHOP FF
1	CUST FF

PEELLE CONTROLLER MANUFACTURED FOR NEMA 1 RATED MACHINE ROOM.

Freight Elevator Doors Since 1905
PEELLE®
We still service equipment we built 50 years ago
The Peelle Company

TITLE	REV	SCALE	SHT
GATE ONLY CONTROL 274203GO SINGLE LINE STANDARD OR SLAVE, W/O F.S.		N/A	2 OF 4

DATE		DRAWING
DRAWN BY		SD–

NO	DATE	REVISION	BY

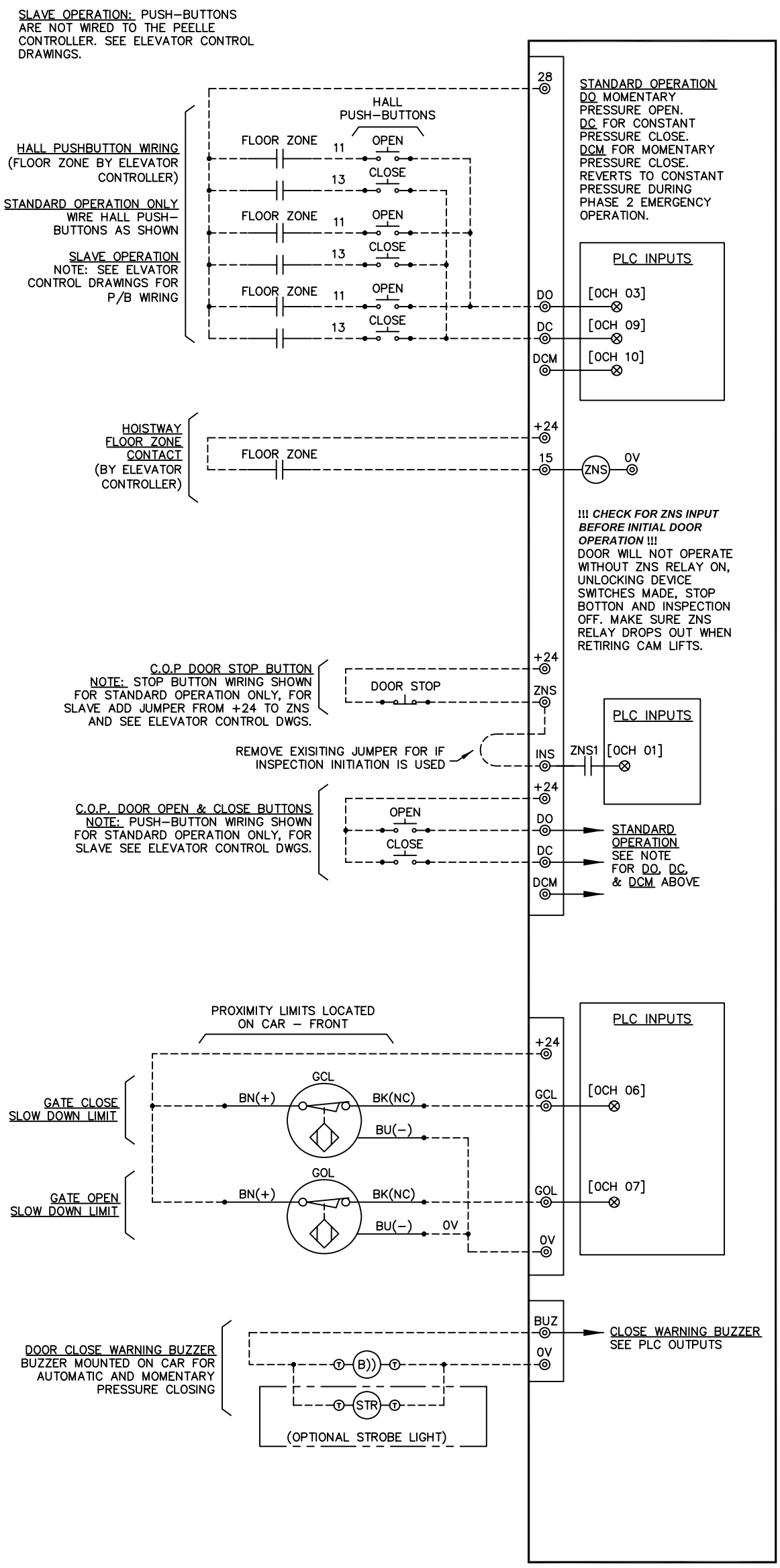

HOISTWAY WIRING CONTROL INPUTS

+24-15 [ZNS RELAY]
CHECK FOR INPUT BEFORE INITIAL DOOR OPERATION !!!
AT LANDING ZONE INPUT
HI = DOOR OPERATION, LO = DOORS STOP

+24-35-ZNS [OCH 02]
CHECK FOR INPUT BEFORE INITIAL DOOR OPERATION !!!
UNLOCKING DEVICE AND STOP BUTTON
HI = DOOR OPERATION, LO = DOORS STOP

(NOTE: PUSH-BUTTON WIRING SHOWN FOR STANDARD OPERATION, FOR SLAVE SEE ELEVATOR CONTROL PRINTS)

28-DO [OCH 03]
HALL DOOR OPEN BUTTON
HI = DOOR OPEN

+24-DO [OCH 03]
CAR DOOR OPEN BUTTON
HI = DOOR OPEN

28-DC [OCH 09]
HALL DOOR CLOSE BUTTON (CONSTANT PRESSURE)
HI = DOOR CLOSE

+24-DC [OCH 09]
CAR DOOR CLOSE BUTTON (CONSTANT PRESSURE)
HI = DOOR CLOSE

28-DCM [OCH 10]
HALL CLOSE BUTTON (MOMENTARY PRESSURE)
HI = DOOR CLOSE

+24-DCM [OCH 10]
CAR DOOR CLOSE BUTTON (MOMENTARY PRESSURE)
(REVERTS TO CONSTANT PRESSURE IN PHASE 2)
HI = DOOR CLOSE

+24-GCL [OCH 06]
GATE CLOSE SLOW DOWN
HI = HI-SPEED, LO = SLOW DOWN

+24-GOL [OCH 07]
GATE OPEN SLOW DOWN
HI = HI-SPEED, LO = SLOW DOWN

RD-(0V) [OCH 02]
LIGHT CURTAIN INPUT
HI = GATE CLOSES, LO = GATE REVERSES
*LIGHT CURTAIN OUTPUT (NPN-SINK) IS LO WHEN BEAMS ARE BLOCKED

+24-RE [OCH 03]
CONTACT REVERSING EDGE (OPTIONAL)
HI = GATE REVERSES, LO = GATE CLOSES

NOTES:

--------- EXTERNAL WIRE ---------

———— INTERNAL WIRE ————

1. ALL LIMIT SWITCHES AND CONTACTS SHOWN WITH NO ACTION APPLIED
2. ◎ TERMINAL CONNECTION ON DOOR CONTROLLER
3. ⓣ COMPONENT TERMINAL CONNECTIONS
4. ⊗ I/O TERMINAL CONNECTION ON PLC
5. CAR AND HALL PUSH BUTTONS BY OTHERS

ROUTING	
QTY	DEPARTMENT
1	ELECTRICAL
1	SUPERVISOR
1	SHOP FF
1	CUST FF

PEELLE CONTROLLER MANUFACTURED FOR NEMA 1 RATED MACHINE ROOM.

Freight Elevator Doors Since 1905
PEELLE®
We still service equipment we built 50 years ago
The Peelle Company

TITLE	REV	SCALE	SHT
GATE ONLY CONTROL 274203GO SINGLE LINE STANDARD OR SLAVE, W/O F.S.		N/A	3 OF 4

DATE		DRAWING
DRAWN BY		SD-

NO	DATE	REVISION	BY

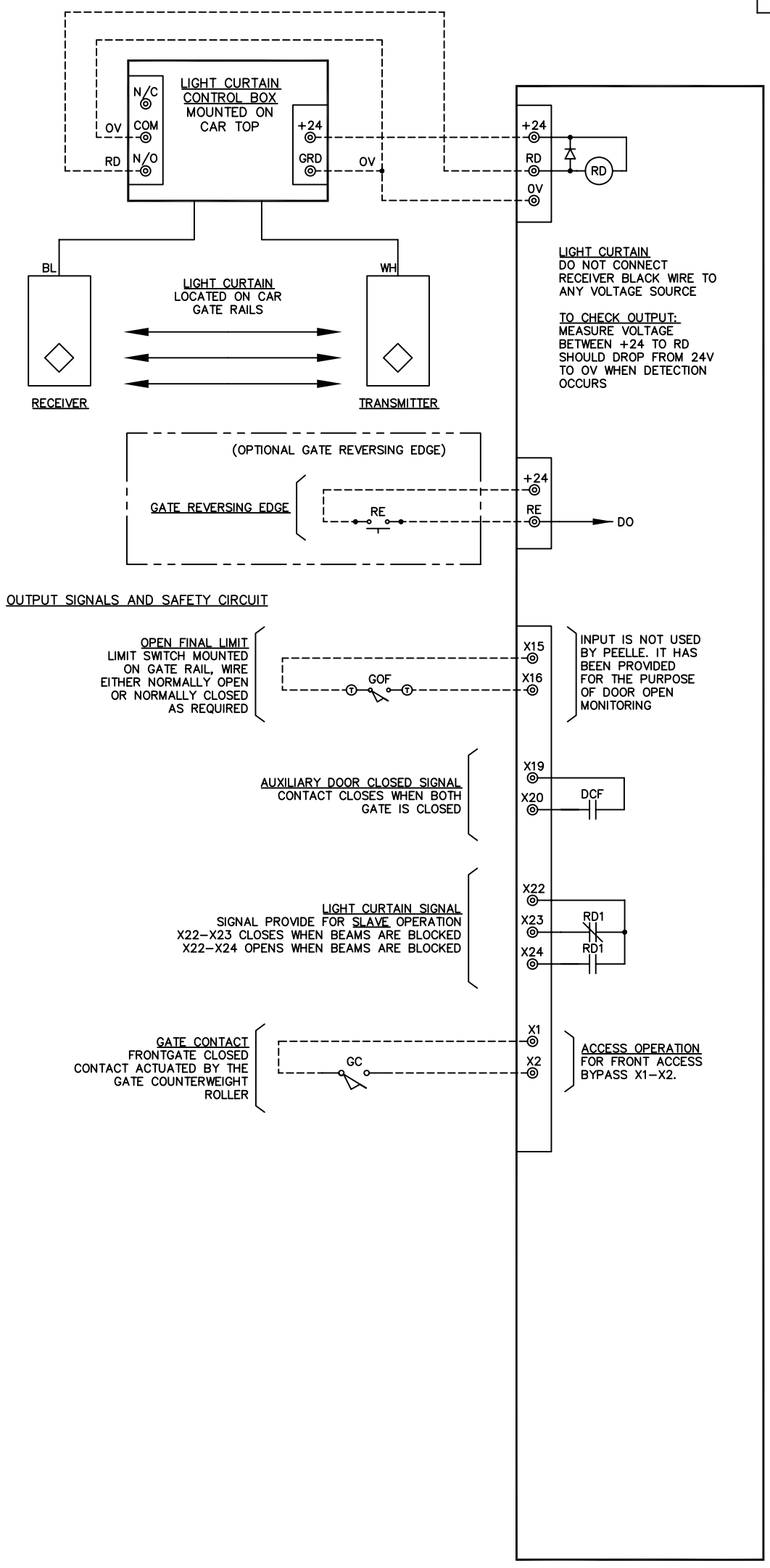

AUXILIARY OUTPUT SIGNALS

X15–X16
GATE OPEN SIGNAL
CONTACT CAN BE WIRED IN FIELD TO CLOSE WHEN GATE IS OPEN OR OPEN WHEN GATE IS OPEN

X19–X20
DOOR CLOSED SIGNAL
CONTACT CLOSES WHEN GATE IS CLOSED

X22–X23
LIGHT CURTAIN SIGNAL (USED IN SLAVE)
CONTACT CLOSES WHEN BEAMS ARE BLOCKED

X22–X24
LIGHT CURTAIN SIGNAL (USED IN SLAVE)
CONTACT OPENS WHEN BEAMS ARE BLOCKED

INTERLOCK CIRCUIT SIGNALS

X1–X2
GATE CLOSED SIGNAL
CONTACT CLOSES WHEN GATE IS CLOSED

NOTES:

--------- EXTERNAL WIRE ---------

———————— INTERNAL WIRE ————————

1. ALL LIMIT SWITCHES AND CONTACTS SHOWN WITH NO ACTION APPLIED
2. ⊙ TERMINAL CONNECTION ON DOOR CONTROLLER
3. Ⓣ COMPONENT TERMINAL CONNECTIONS
4. ⊗ I/O TERMINAL CONNECTION ON PLC
5. CAR AND HALL PUSH BUTTONS BY OTHERS

ROUTING	
QTY	DEPARTMENT
1	ELECTRICAL
1	SUPERVISOR
1	SHOP FF
1	CUST FF

PEELLE CONTROLLER MANUFACTURED FOR NEMA 1 RATED MACHINE ROOM.

Freight Elevator Doors Since 1905
PEELLE®
We still service equipment we built 50 years ago

The Peelle Company

TITLE	REV	SCALE	SHT
GATE ONLY CONTROL 274203GO SINGLE LINE STANDARD OR SLAVE, W/O F.S.		N/A	4 OF 4

DATE		DRAWING
DRAWN BY		SD–

NO	DATE	REVISION	BY

274203GO CONTROLLER – SINGLE LINE

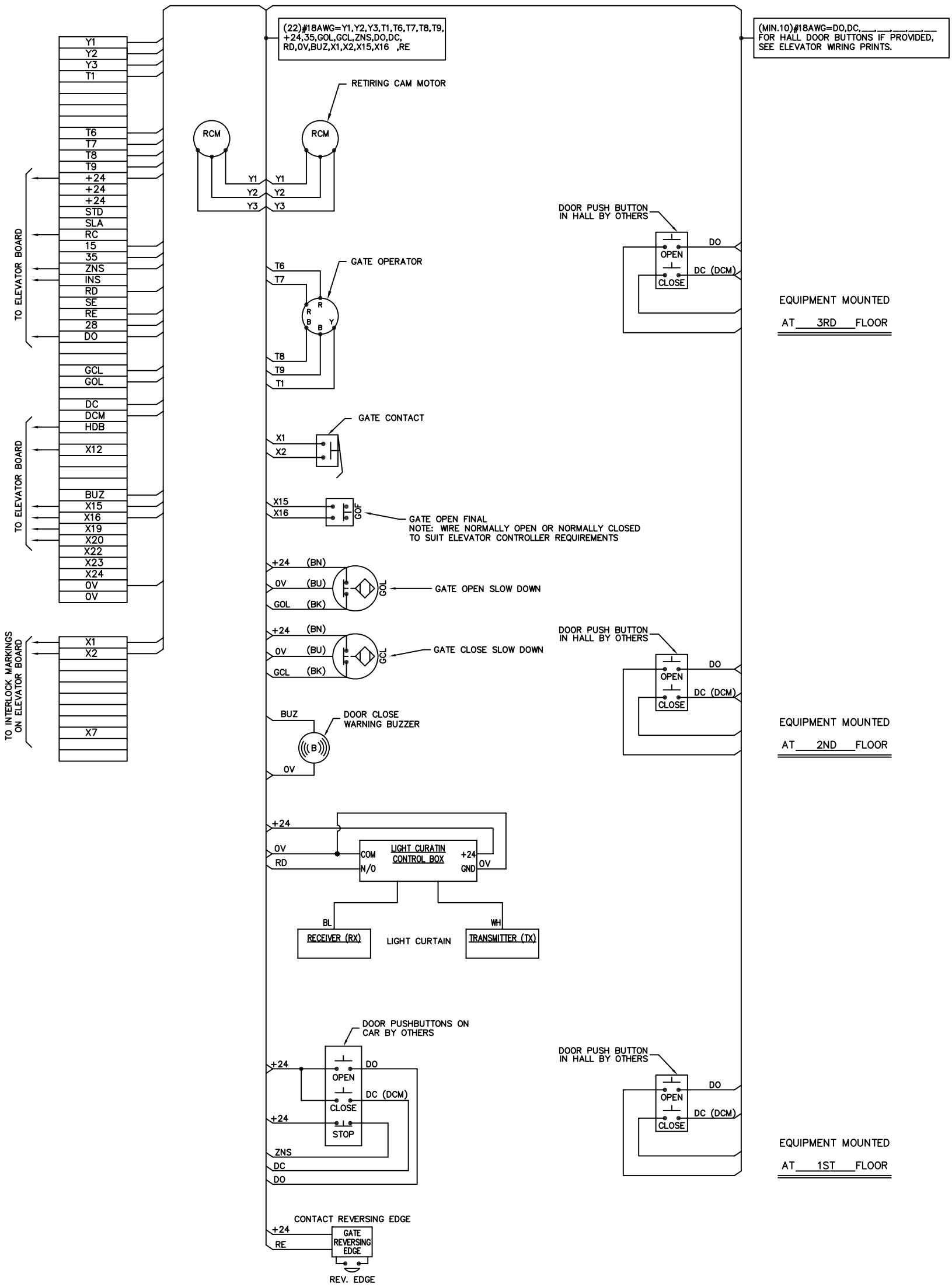

NOTE:

STANDARD OPERATION
WIRE ALL DEVICES AS SHOWN.

SLAVE OPERATION
SEE ELEVATOR PRINTS FOR PUSH–BUTTON WIRING. SEE ELEVATOR PRINTS FOR PANEL TO PANEL CONNECTIONS.

ROUTING	
QTY	DEPARTMENT
1	ELECTRICAL
1	SUPERVISOR
1	SHOP FF
1	CUST FF

PEELLE CONTROLLER MANUFACTURED FOR NEMA 1 RATED MACHINE ROOM.

Freight Elevator Doors Since 1905
PEELLE®
We still service equipment we built 50 years ago
The Peelle Company

TITLE	REV	SCALE	SHT
HOISTWAY WIRING 274203GO SINGLE LINE GATE ONLY		N/A	1 OF 1

DATE		DRAWING
DRAWN BY		SD–