# 262-EN

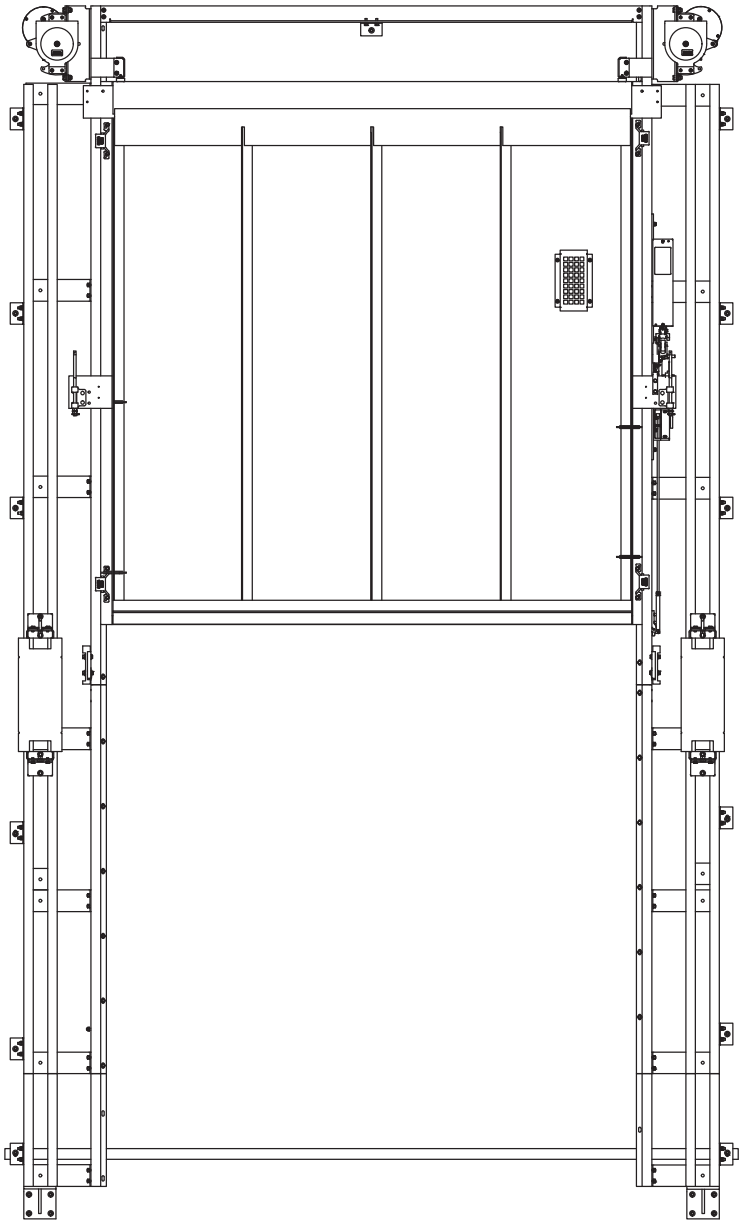

# SLIDE DOWN DOOR INSTALLATION GUIDE


PEELLE®

**THE PEELLE COMPANY**

FREIGHT DOORS | CAR GATES | CAR ENCLOSURES

**TECHNICAL SUPPORT** 1-800-787-5020 ext 275



**Guide No. 262-EN**

**SLIDE DOWN DOOR INSTALLATION GUIDE**

Date: April 08 / 2019

# Contents




PEELLE®

**THE PEELLE COMPANY**

FREIGHT DOORS | CAR GATES | CAR ENCLOSURES

**TECHNICAL SUPPORT** 1-800-787-5020 ext 275



**Guide No. 262-EN**

**SLIDE DOWN DOOR INSTALLATION GUIDE**

Date: April 08 / 2019

## 1. FORWARD

The following Installation Guide is for a standard Peelle product assembly. However, Peelle products are designed-built to suit many elevator conditions such as very large openings, limited elevator shaft dimensions, hoistway conditions and unique lift designs. Therefore special designs, arrangements or add-ons may not be covered in this manual. Refer to the installation drawings provided with your order for instructions on special components or arrangements.

If you have any questions, concerns or require further details regarding your installation please call 1 (905) 846-4545 x 275, please have your Peelle Job Number handy. A Peelle technical support expert will help you save time and keep the installation moving.

## 2. ELEVATOR CONTRACTOR RESPONSIBILITIES

**PRIOR TO THE START OF PEELLE INSTALLATION, THE FOLLOWING SHALL BE PROVIDED BY OTHERS**

1) A running and operational elevator with platform, car safeties and a temporary run box. There should be no hot wires running to the equipment that Peelle will be replacing. This includes hall push buttons even if not being replaced by others.
2) Clearances in conformance with Peelle layout drawings.
3) Unless furnished by Peelle, all necessary electrical piping and wiring material required for the Peelle equipment.
4) Electrical power in the machine room adequate for Peelle equipment and Peelle control system.
5) 115V (230V where applicable), single phase power adequate for power tools.
6) A suitable, secure, and conveniently located storage area for Peelle furnished materials, tools, and other equipment necessary to the installation of Peelle equipment. This area should be as close to the elevator as possible.
7) Completed hoistway walls with entrance frames installed in conformance with Peelle requirements. Refer to Peelle Entrance Frame Installation Guide 208.

## 3. BEFORE STARTING INSTALLATION

1) This is a two person job
2) Safety Equipment
   - Personal Protective Equipment
   - Workplace Barricades
   - Fall Protection
3) Hoist or Crane - 2 required
   - Mounted at top of hoistway
   - Located at each side of the doorway

4) Tools required

- ☐ Measuring Tape
- ☐ Level
- ☐ Set Square
- ☐ Carpenters Clamps 24” [610mm]
- ☐ Hammer
- ☐ High Speed Drill
- ☐ Drill Bits HSS 11/32” [9mm] (5 per landing)
- ☐ Hammer Drill
- ☐ Masonry Bits 5/16” [8mm]
- ☐ Masonry Bits 1/2” [14mm]
- ☐ Impact Wrench
- ☐ 9/16” [14mm] socket
- ☐ Angle Grinder
- ☐ Chain Pin Extractor (Chain Breaker) (Peelle Part No. 0608)
- ☐ Open and closed ended wrenches (3/8” to 7/8”) [10mm to 22mm]
- ☐ Socket set (3/8” to 7/8”) [10mm to 22mm]
- ☐ Screwdriver Set
- ☐ Pliers

## 4. JOB NUMBER IDENTIFICATION

- Locate the peelle job number on the rails and door panels.
- Job numbers should match and include the line designation.
- Example: 100000 1A

100000 = Job Number
1 = Floor Designation
A = Front Line (C = Rear Line)

## 5. HANDING

- The following is an illustration of a typical freight elevator hoistway. The left and right hands (LH and RH) of door/gate hardware are viewed from inside the car looking out.
- Instructions shown here are typical for a car gate with a Peelle right hand mounted interlock and retiring cam. For left hand installations opposite configuration will be used.
- Line “A” Front and Line “C” Rear/Opposite are used by Peelle. Where there is more than one line of doors, the front is usually the side with the most doors.

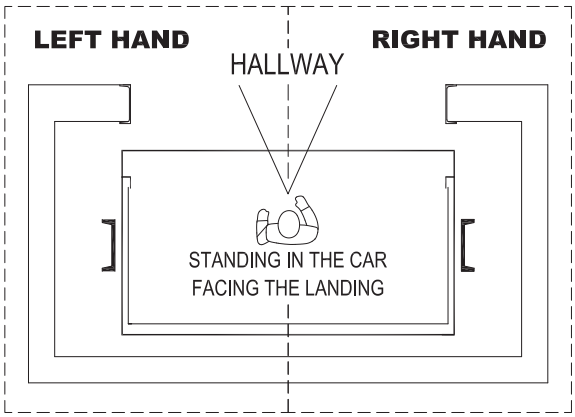


PLAN VIEW OF HOISTWAY

# 6. SLIDE DOWN LANDING DOOR INSTALLATION

## 6.1. GENERAL

Install hoistway landing doors before the car door(gate). If possible, install doors before the freight car enclosure (cab) is installed.

Use the moving elevator car platform for door installation. A full kit of hand tools will be required, including open-end wrenches, socket wrenches, screwdrivers, and various types of pliers. In addition, a good supply of drills (especially 9mm [11/32 in]) will be needed since these become dull rapidly from contact with concrete which is unavoidable when drilling into the channel steel entrance frame for door rail installation.

A heavy duty drill will be required. An electric impact wrench should be used for installing the self-tapping rail bolts.

Hoisting equipment will be required. Chain fall or electric hoist rated 1/2-ton [500 kg] are needed for door panels and counterweights. Make sure hoists and slings are in good condition.

## 6.2. DOOR GUIDE RAIL TYPES

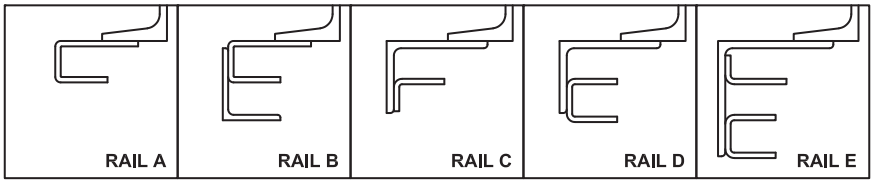


***Figure 1 -*** *Door Rail Types - depending on door size and configuration*

The doors are guided in parallel door tracks on each side of the opening.

Door guide rails extend from the building sill up past the opening for a distance that depends on the telescopic panel configuration.

Door guide shoes often travel across a split in the rails for long rails that need to be split for manufacturing and shipping purposes.

Guide Rails are identified with the Peelle Job Number and floor designation ***(see pg 2, sec 4)***.

## 6.3. DOOR GUIDE RAILS - LOCATION

The first step in the installation of freight elevator doors is the determination of the best horizontal location for rails on the flange of the vertical jambs. Take a survey of the actual jamb positions compared to the Peelle L-1 layout drawing.

This can be done by in one of the following ways:

a) Using the moving platform as a plumb mark if the car is operating, ***(see pg 11, sec 10).***
b) Drop a plumb line or laser plumb guide.

For (a), a mark is made on the movable platform to simulate a plumb line. Take a measurement from that line as you would from a plumb line. For (b), a plumb line (wire) may be dropped near one side of the door frames. It is to extend from above the top door head jamb to within a few inches of the pit floor. A self-leveling laser plumb bob is worth the investment. Sit the device on the floor of the pit.

Check the vertical alignment of the vertical jambs. Take measurements at each floor to both jambs from the car platform mark or from the plumb wire. Fill out the chart provided ***(see pg 10, sec 9)***. Using these measurements and a comparison to the Peelle L-1 layout drawing, get an average guide rail setting for all floors in that line. Rails are to be set one above the other (in vertical alignment) from the bottom to the top of the hoistway.

Misalignment of frames not exceeding 25mm[1in] is tolerable and does not require fixing or reseting of the frames.

Check the following clearances ensuring the door will fit in the required space. ***(see pg 10, sec 9)***

- Car Clearance
- Running Clearance
- Building Sill

If frames are not parallel with the elevator platform use the rail shims to keep the rail straight and plumb. If more than 6mm [1/4”] of rail shims is required, weld a steel flat / bar (min. 6mm x 65mm [1/4” x 2 1/2”] ) to the full length of the jamb flange, in order to make up the space.

Doors require that the distance between guides (DBG) dimension be 3mm [1/8 in] longer than the dimension between the base of the throats of the guide shoes. This should be checked on two or more door panels. Care in using the door gauge rod is important because at the same time the rails must be set exactly plumb. If you are careful with this procedure, you will install free running doors as the overall side-to-side play movement (left-right) will be 3mm [1/8 in] as recommended.

## 6.4. DOOR GUIDE RAILS – INSTALLATION

Position the center of the gauge rod on the center of the opening. Use this to position your first rail. ***(see pg 12, sec 11)***

Install the door rails, beginning with the rails on the lowest landing.

Ensure the building sill is level across each opening ***(see pg 13, sec 12)***. The rail is to be placed even with the sill.

**After the door is installed, the door astragal must be level from one side of the door to the other.**

Set the interlock rail on the building sill and secure the rail to the entrance frame using two 610mm [24”] steel carpenter clamps ***(see pg 15, sec 14)*** Set the rail plumb. The top of the rail should not interfere with the opening above. Drill and bolt the rail using the self-tapping, locking, washer head bolts ***(see pg 16, sec 15)***.

The opposite rail, at each opening, should be located with the door gauge rod to maintain the proper door DBG (Distance between Guides) ***(see pg 17, sec 16)***. Use the door gauge rod at the top and bottom of the opposite rail. Check the opposite rail with a level or plumb line. Hold the rail with clamps ***(see pg 18, sec 17)***.

The holes to fasten the rails should be drilled using a 9mm [11/32”] high speed drill bit for the self-tapping bolts. Holes are drilled with the rails clamped in place. Bolts may be driven with an electric impact tool. The self-tapping bolts supplied have a washer head with locking. Additional washers are never used with rail mounting bolts. Rail mounting holes are slotted vertically and the bolts should be located at the top of the vertical slots.

Fasten the rail clips to the wall using masonry anchors ***(see pg 20, sec 19)***.

## 6.5. DOOR OPERATORS INTERLOCKS & OTHER COMPONENTS

A pair of door operators is necessary at each opening to support the chain (and thus the doors). The operators allow movement for opening and closing. Holes are provided in the door rails above the head-of-frame to bolt the operators in place. ***(see pg 21, sec 20)***

Slide down Peelle doors are equipped with an interlock on one side of the opening.

Interlock plug rods are shipped loose and must be installed before the interlock. Make sure the correct length of plug rod is used on the proper opening as lengths could vary for different openings. ***(see pg 22, sec 21)***

Temporarily mount the interlock and mechanical lock using the top and bottom holes / slots provided ***(see pg 23, sec 22)*** exact vertical position will be set later

Install the position encoder in the predefined holes below the operator on the interlock side ***(see pg 24, sec 23)***

## 6.6. DOOR PANEL

There is a single panel provided for each opening. Door panels for most openings are too heavy to move into place by hand and will require the use of a heavy duty drywall cart to move about. They will have to be set in place with a chain fall or electric hoist. If door panels are bowed from shipment, straighten before installing. Handle with care and protect fascia surface until completion. To check if the door panels have been twisted during shipment, place panel on hoistway side of door rails, check if all four corners touch (not twisted).

Door panels are identified by the same system of factory markings as the rails ***(see pg 25, sec 24)***.

Before installing a door panel, be sure that no excess concrete mortar protrudes from the hoistway shaft wall that could scrape the door face and slow it down. Break off any suspected pieces with a hammer.

Remove the shoes from either side of the panel. Using the chain hoist, start to pick up the lower panel with a sling. Take the slack out of the hoisting chain and sling ***(see pg 33, sec 27)***. Push the lower panel into the rails. Reinstall the shoes. Drop the lower panel (to its fully closed

position), panels should overlap lintel and sill 50mm[2in]

## 6.7. COUNTERWEIGHT INSTALLATION

Remove the counterweight guide shoes, slide the guide shoes into the rail from the top down. Position and re-attach the counterweight to the shoes.

Hoist the counterweight up to the top of the track and secure the counterweight. The top of the counterweight shoe should be set flush with the top of the counterweight track (rail) ***(see pg 31, sec 25)***

Install the chains ***(see pg 32, sec 26)***

## 6.8. DOOR CHAINS & CHAIN RODS

### LOWER PANEL

A pair of chains and chain rods are provided for each lower panel. Their function is to couple the door panels and counterweight together.

One end of each chain is connected to a chain stud on top of the counterweight, which is connected to the lower panel chain rod. The chain rods are threaded to allow for chain adjustment, when needed later.

Install the threaded end of the chain rod into the chain rod holder. Put one nut, a lock washer and second nut onto the threads, then cotter pin; move nuts and lock washer down to cotter pin, hold rod up temporarily with vice grips ***(see pg 34, sec 28)***

Next attach the chain to the counterweight stud using connecting links. Pass the chain up and over the sheave and down to the lower panel chain rod mark and cut the chain to length at the top of the chain rod. Grind of the end of the pin and hammer out the pins. Use a chain breaker device if you have one. Attach the free end of the chain to the rod using chain connector link ***(see pg 34, sec 28).***

Use the hoist to lower the counterweight until it is held up by the chains. Make sure that all chain connecting links are properly connected. Chain connector clip should have legs pointing downward. Wrap connecting links and connector clips at each end of the chain with the nylon tie-wraps provided ***(see pg 33, sec 27).***

**Peelle chains are lubricated by the manufacturer. NO OIL or GREASE is required upon initial installation.**

## 6.9. TO ADJUST DOOR CHAINS AND DOOR PANELS

After the chains are connected, the door panels must be properly adjusted. Most of the adjustment, if necessary, is accomplished by moving the nuts up on the chain as rod ***(see pg 41, sec 32.2).*** Some links of chain may have to be removed to achieve desired adjustment.

### TO ADJUST COUNTERWEIGHT POSITION

When the doors are fully closed the counterweight should not extend beyond the rails or

interfere with the door operators. When the doors are fully open the counterweight should not extend beyond the rail. Adjust the position of the counterweight using the chain rods located on the lower panel. Remove chain links as necessary.

**TO REMOVE CHAIN LINKS**

Fully close the panels, and relieve tension on the door chains, by hoisting the counterweights, using a chain hoist.

Make sure the nuts are almost touching the cotter pins near bottom of each chain rod, clamp the rods with vice grips positioned on top of the rod holders, disconnect the chains, remove links from both chains with a chain breaker.

Reconnect the chains. Carefully remove the chain hoist from the counterweight and remove the temporary clamps (vise grips) from the chain rods.

## 6.10. ADJUST PANEL BETWEEN GUIDES

Allow 3mm [1/8 in] overall side-to-side play. The side-to-side play should be the same at the top and bottom shoes of each panel to make sure the doors operate freely. There should be little need for chain adjustment if the rails are plumb and the panels are an equal distance apart vertically, both sides, when fully open. If necessary, adjust the "adjustable" shoes inward or outward to achieve 3mm [1/8 in] side-to-side play. ***(see pg 43, sec 32.4)***

**Do not leave the doors in an open position without a barricade. Bolt the doors closed or lock them with an interlock.**

## 6.11. FOR INTERLOCKS, OPERATORS AND OTHER COMPONENTS

***(see pg 39, sec 32)***

## 7. DOOR ASSEMBLY

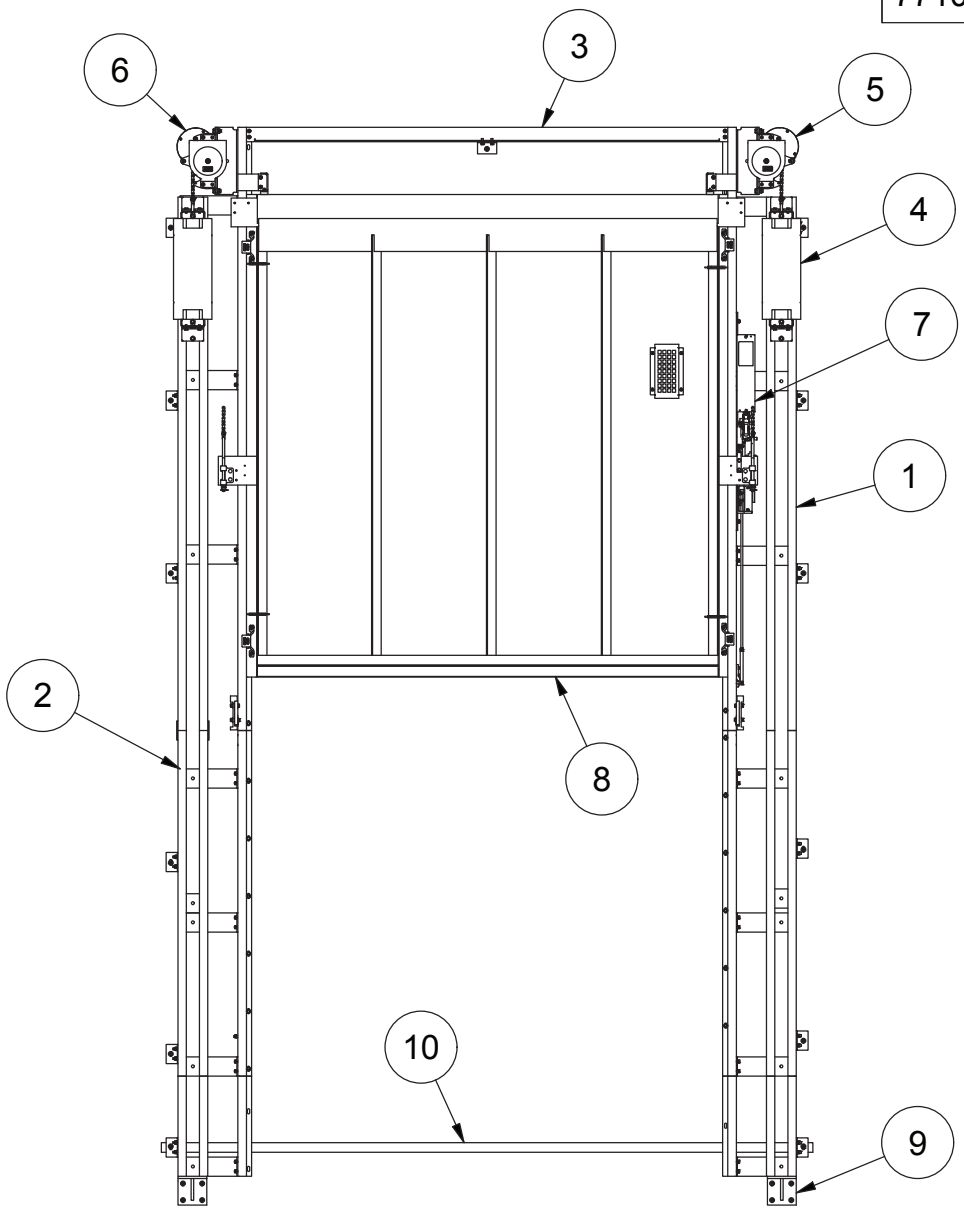


| ITEM | QTY | PART NO | DESCRIPTION |
|---|---|---|---|
| 10 | 1 | 771025 | DOOR RAIL SPREADER |
| 9 | 2 | 771021 | COUNTERWEIGHT STOP |
| 8 | 1 | 771008 | DOOR PANEL (SLIDE DOWN) |
| 7 | 1 | 2356-67RU | INTERLOCK |
| 6 | 1 | 0569LM | OPERATOR ASSY |
| 5 | 1 | 0569RM | OPERATOR ASSY |
| 4 | 2 | 770305 | COUNTERWEIGHT ASSY |
| 3 | 1 | 771026 | TOP RAIL SPREDER |
| 2 | 1 | 771006 | LEFT COUNTER WEIGHT RAIL ASSY |
| 1 | 1 | 771007 | RIGHT COUNTER WEIGHT RAIL ASSY |

## 8. FLOOR HEIGHT CHECK

771005-02

- Check floor height against layout drawings (Peelle L-1).
- Rail lengths allow for 1in [25 mm] tolerance. If variation exceeds 1in [25 mm] contact Peelle.

| | |
|---|---|
| | |
| | |
| | |
| | |
| | |
| | |
| | |
| | |
| | |
| | |
| | |
| FLOOR | HEIGHT |
| FRONT LINE "A" | |

| | |
|---|---|
| | |
| | |
| | |
| | |
| | |
| | |
| | |
| | |
| | |
| | |
| | |
| | |
| | |
| FLOOR | HEIGHT |
| REAR LINE "C" | |

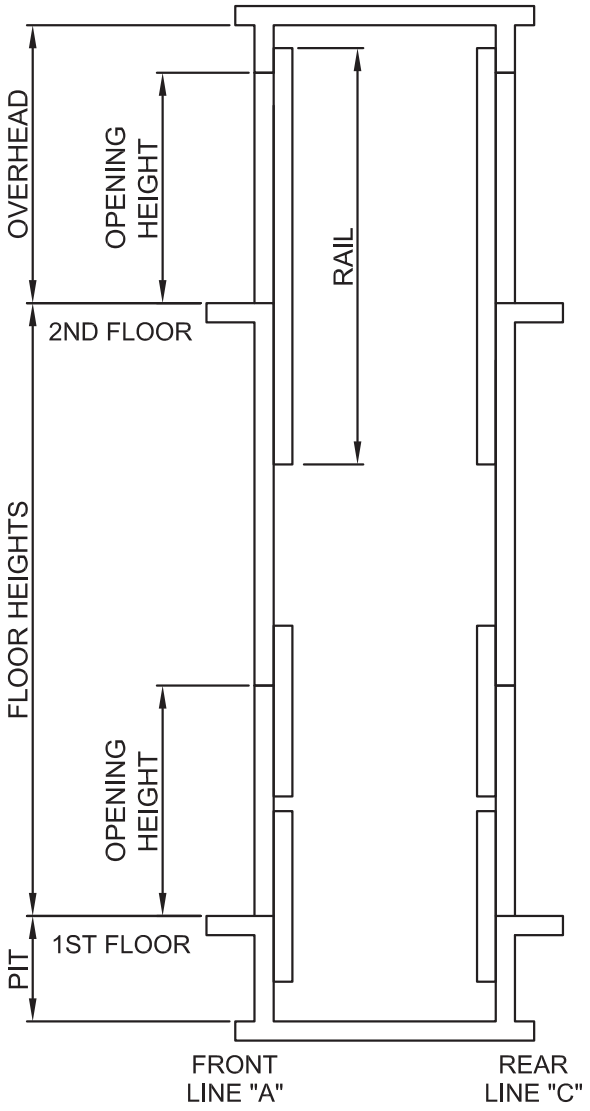


ELEVATION

## 9. CLEARANCE CHECK

770440-01

Measure the distance between the platform & entrance frame (both side) see dimension A and B. Measure at floor level and top of opening. Dimensions will be used later for adjusting and shimming the rails.

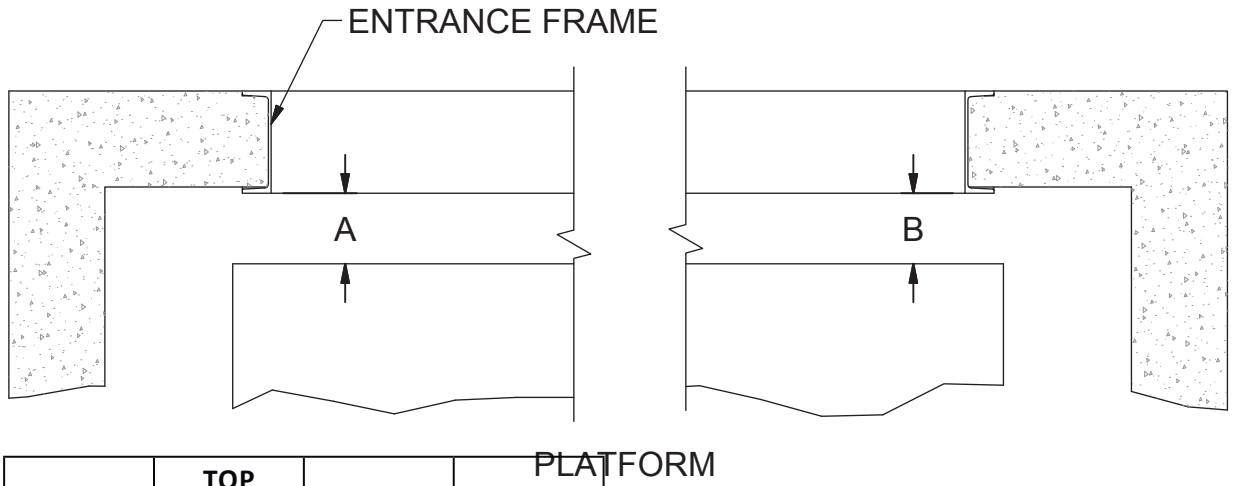


| | | | |
|---|---|---|---|
| | TOP | | |
| | BOTTOM | | |
| | TOP | | |
| | BOTTOM | | |
| | TOP | | |
| | BOTTOM | | |
| | TOP | | |
| | BOTTOM | | |
| | TOP | | |
| | BOTTOM | | |
| FLOOR | POSITION | A | B |
| FRONT LINE "A" | | | |

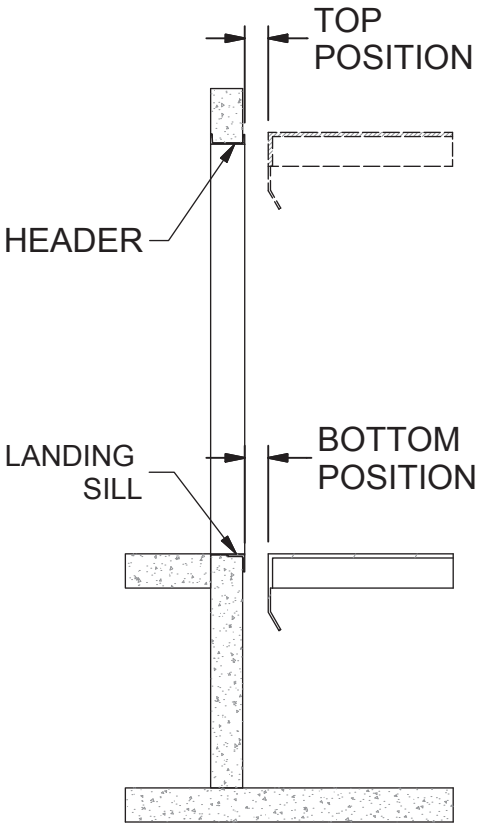


| | | | |
|---|---|---|---|
| | TOP | | |
| | BOTTOM | | |
| | TOP | | |
| | BOTTOM | | |
| | TOP | | |
| | BOTTOM | | |
| FLOOR | POSITION | A | B |
| REAR LINE "C" | | | |

## 10. AVERAGE OPENING CENTERLINE

770441-01

**Openings are generally not perfectly centered. Follow these steps to get entrance aligned at each floor.**

### 10.1. MARK JAMB POSITION AT EACH FLOOR

Mark platform showing the position of the frame at each floor.

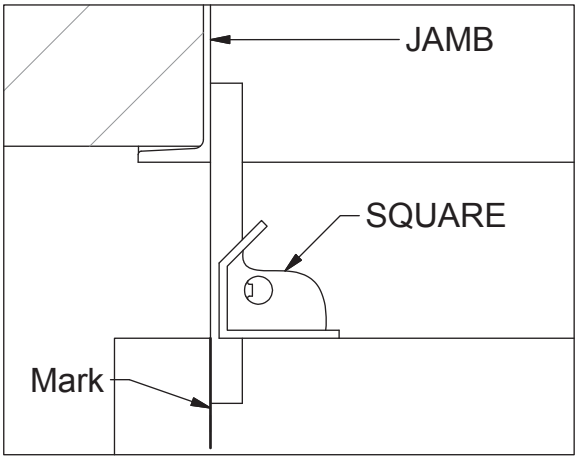


### 10.2. AVERAGE OPENING CENTERLINE

Determine your " Average Opening Centerline". Measure the distance between the 2 farthest marks on your platform and mark the center.

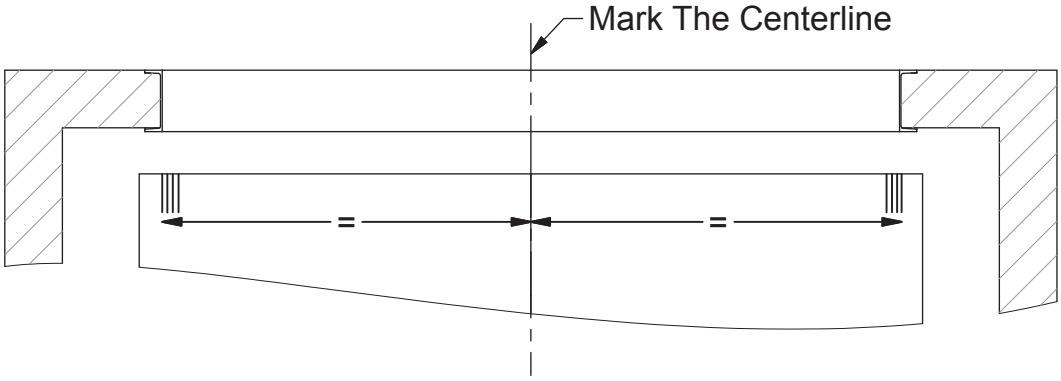

## 11. LOCATING CENTER OF THE OPENINGS

770441-02

**DBG = Distance Between Guides**

**11.1. POSITION THE CENTER OF THE GAUGE ROD ONTO THE AVERAGE OPENING CENTER LINE.**

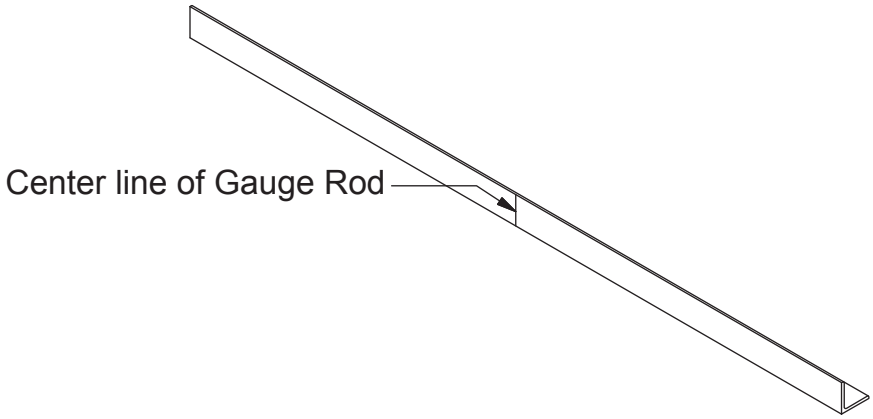


**11.2. NEXT TRANSFER THE DBG TO THE PLATFORM.**

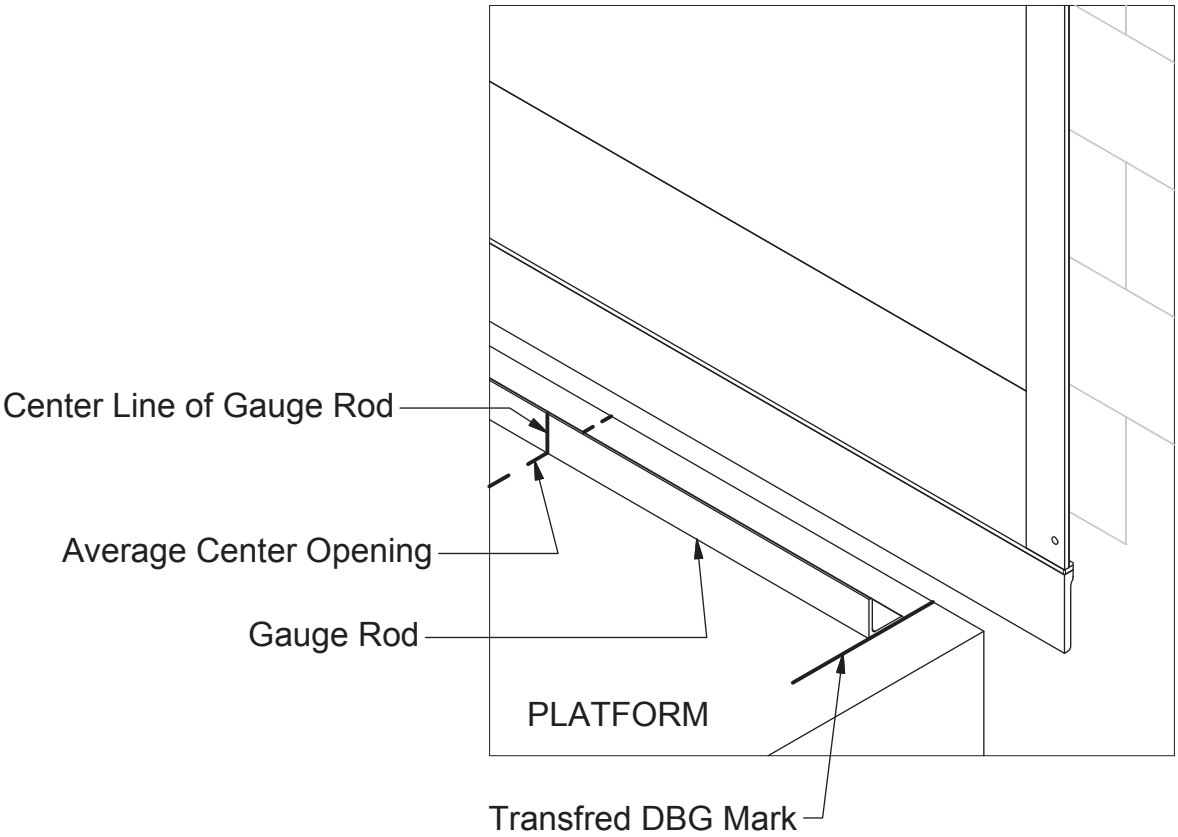

## 12. BUILDING SILL LEVEL CHECK

770440-04

### 12.1. LEVEL THE SILL

Ensure Building Sill is Level +/- 3/8” [10mm]. If sill is out more than 3/8in [10mm] have sill corrected.

### 12.2. IDENTIFY LOWEST SIDE

Identify and mark the lowest side of the sill and project to opposite side of entrance.

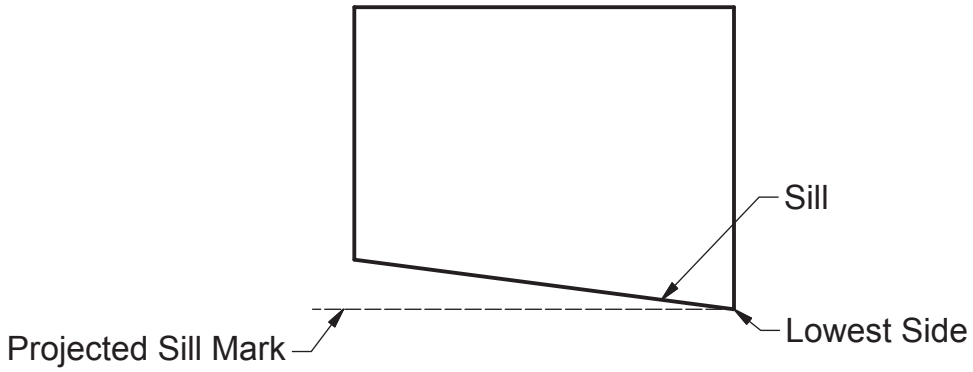


### 12.3. POSITION THE RAIL

When installing the first rail align the sill mark with the lowest side of the sill.

**When installing the rail, align the sill mark with the lowest side of the sill (Projected Sill Mark).**

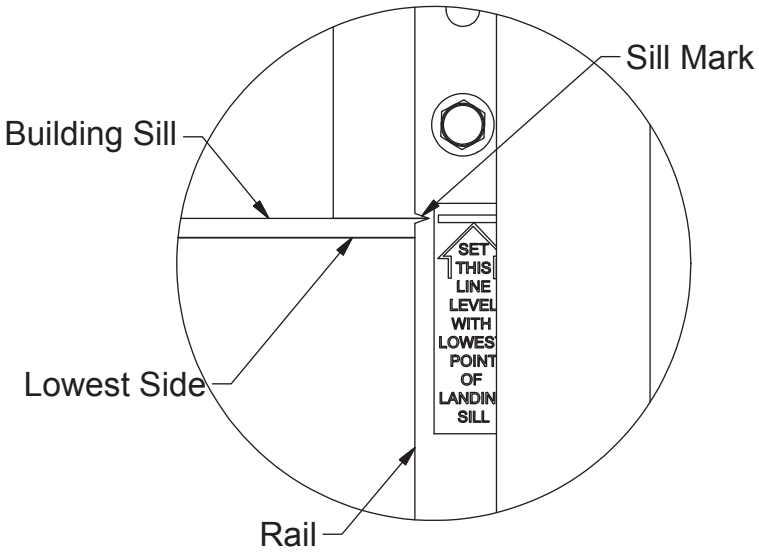

## 13. GUIDE RAIL INSTALLATION - OVERVIEW

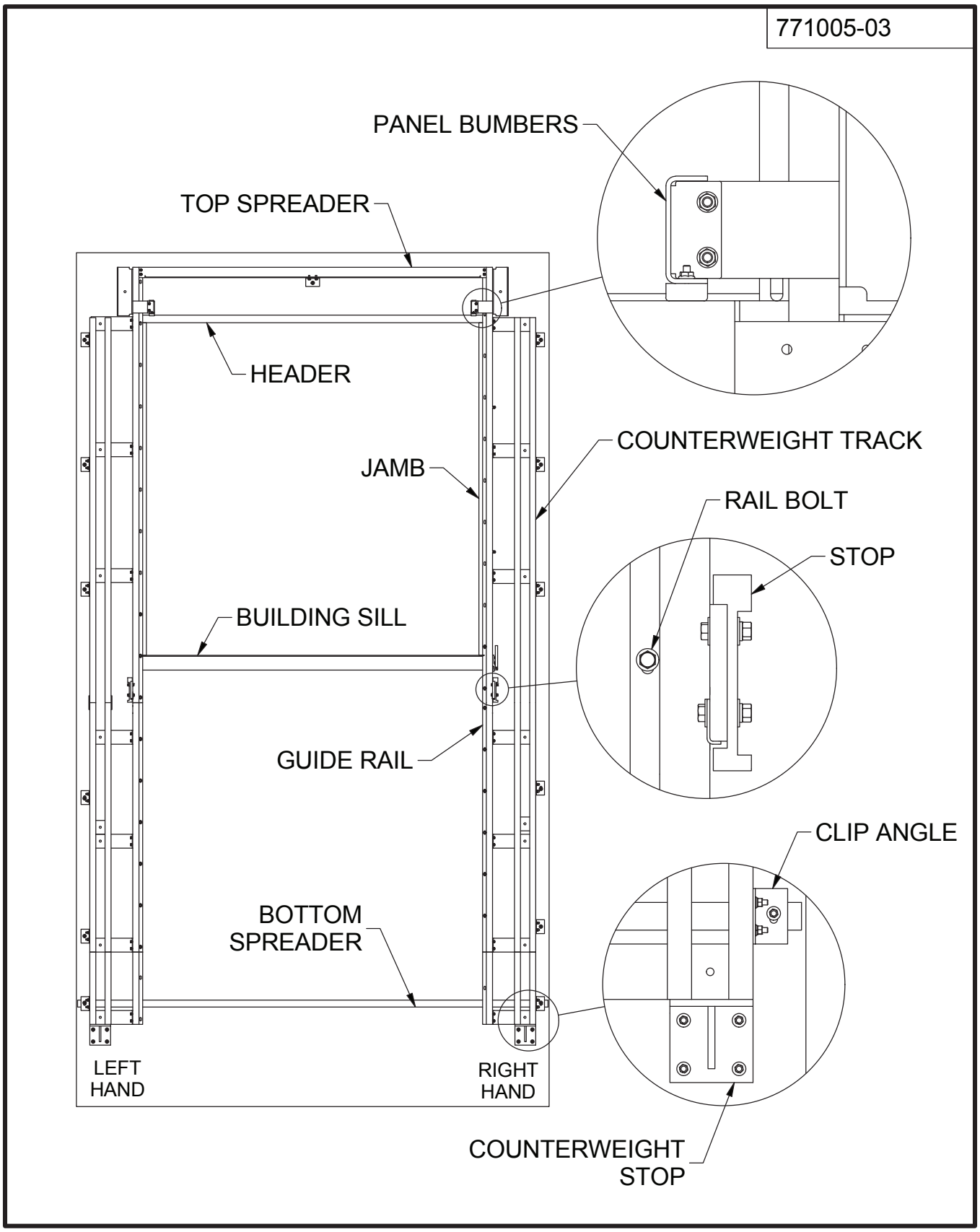

## 14. RAIL INSTALLATION

771005-04

1) Locate the job number and floor designation on the rail
2) Set rail on building sill
3) Clamp the rail to the entrance frame
4) Set the DBG using set square and markings
5) Ensure the rail is level in the vertical direction

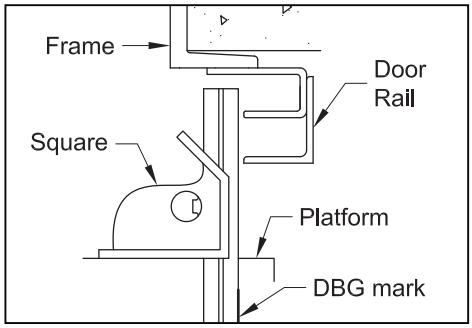


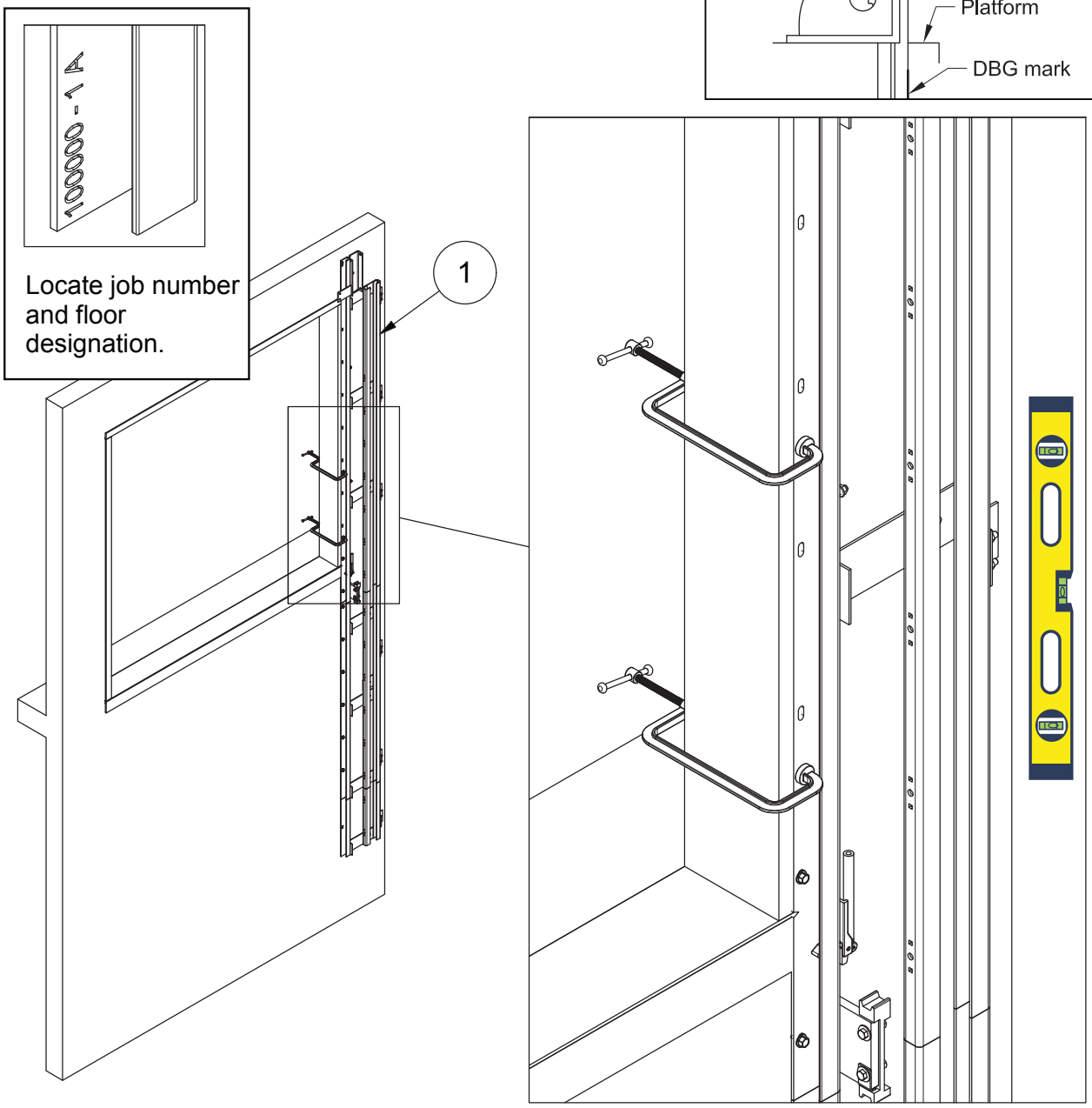


| ITEM | QTY | PART NO | DESCRIPTION |
|---|---|---|---|
| 1 | 1 | 771007 | RIGHT COUNTER WEIGHT RAIL ASSY |

# 15. RAIL BOLTING

770446-03

## 15.1. RAIL BOLTING

1) Drill 11/32” [8.5mm] hole into steel entrance frame. Approximately 1/2in [13mm] deep. Avoid drilling into masonry wall. When drilling through rail slot ensure hole is in top of slot.
2) Drill 5/16in [8mm] hole into masonry wall. Approximately 1 1/2in [38mm] deep
3) Use 9/16” [14 mm] impact driver to install #06004 Rail Bolt. Do not use washers. Only install rail bolts into steel entrance frames.

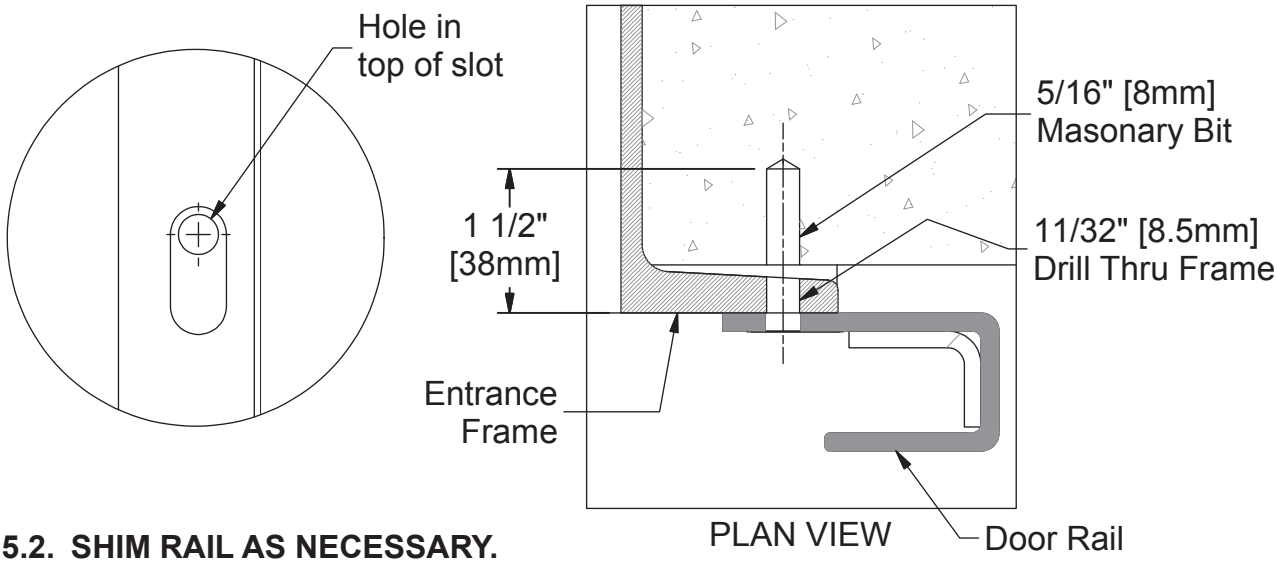


## 15.2. SHIM RAIL AS NECESSARY.

Refer back to “Car Clearance Check”.

## 15.3. IN ORDER TO KEEP RAILS PLUMB AND MAINTAIN THE CORRECT CAR CLEARANCE USE “0629 RAIL SHIMS”.

1) Loosen rail bolt
2) Hook the rail shim onto the rail bolt
3) Tighten rail bolt
4) Check rail is plumb

**Maximum of 6 shims per bolt, If you require more than 6 shims weld flat bar to frame.**

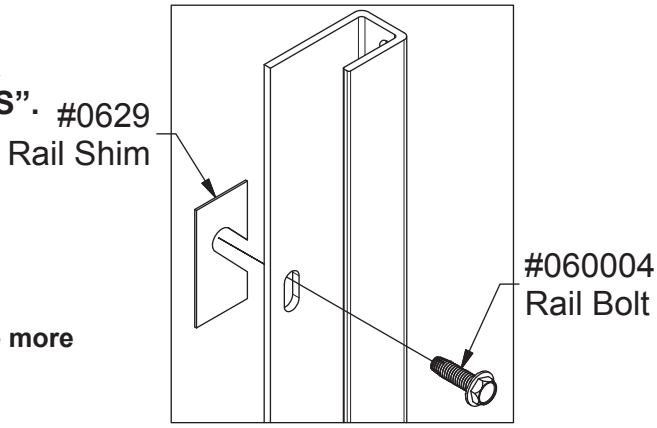


**DOOR RAIL TYPES DEPENDING ON DOOR SIZE AND CONFIGURATION**

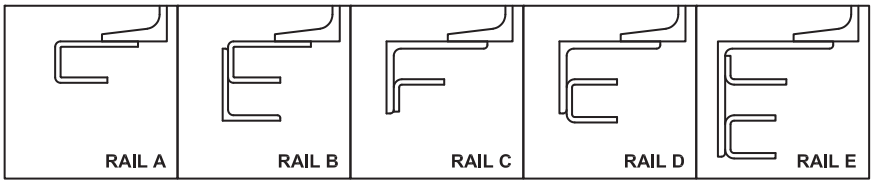

## 16. HOW TO USE GAUGE ROD - OVERVIEW

770446-14

**DBG = Distance Between Guides**

**DOOR RAIL GUIDE = Is the leading edge of the guide rail**

- The gauge rod is used to correctly space the left rail from the right rail, this will allow your door panel to fit perfectly between the rails and operate smoothly.
- We will be using the gauge rod to locate the center of our door rails onto the center of our opening.
- After installing one side of your rail, position and clamp the opposite rail onto the entrance frame.
- Using the gauge rod, position the door rail guides against the gauge rod.
- Before drilling and bolting the rail hold the gauge rod level between the two rail guides.
- Slowly move the gauge rod up and down the rail, keeping the rod gauge level.

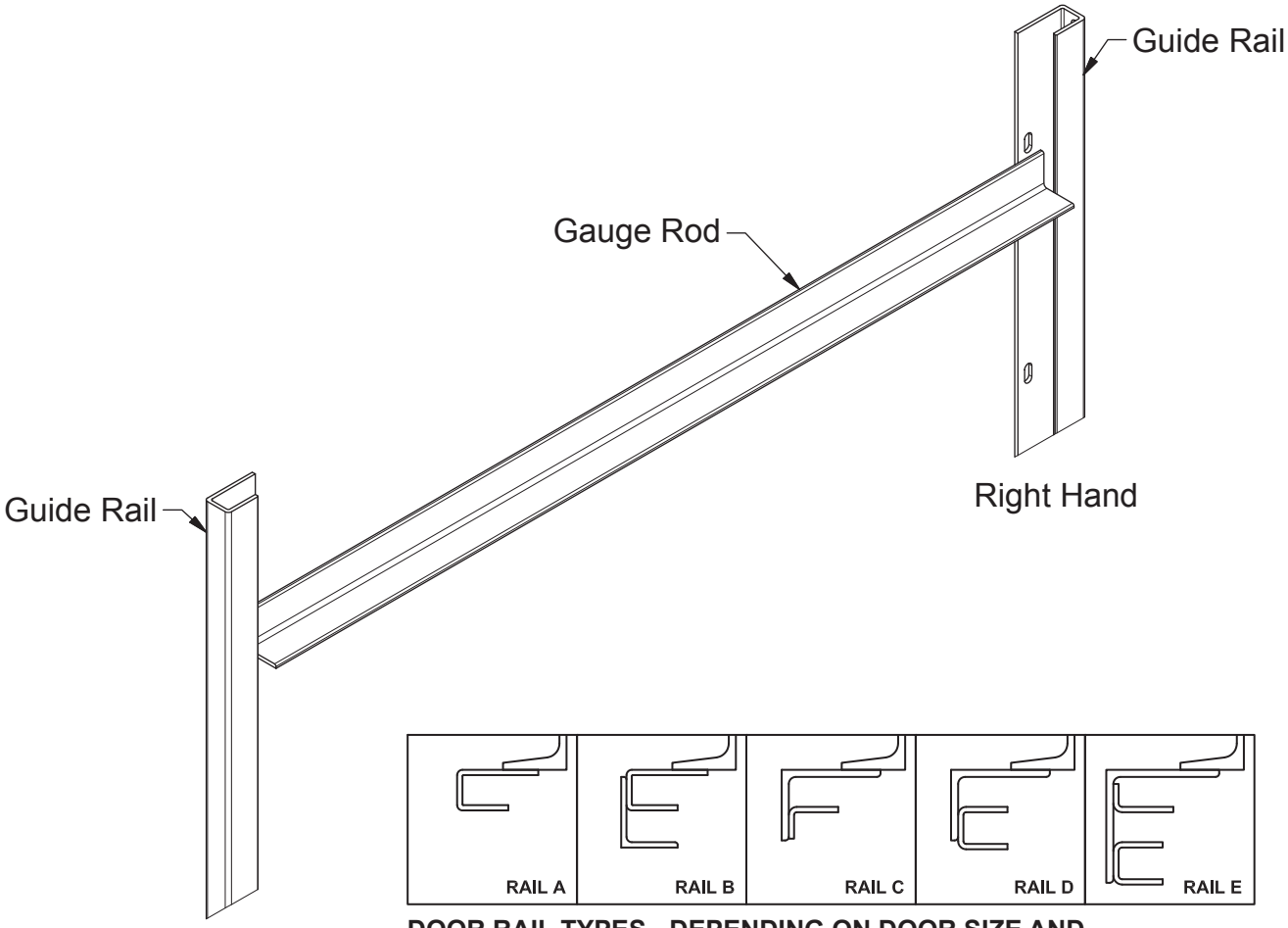





**DOOR RAIL TYPES - DEPENDING ON DOOR SIZE AND CONFIGURATION**

## 17. RAIL INSTALLATION - OPPOSITE SIDE

771005-05

1) Locate the job number and floor designation on the rail
2) Set rail on building sill
3) Clamp the rail to the entrance frame
4) Use a level to ensure upright vertical position
5) Use gauge rod to ensure rails ARE CORRECT distance apart (DBG)
6) Drill and bolt rail into position

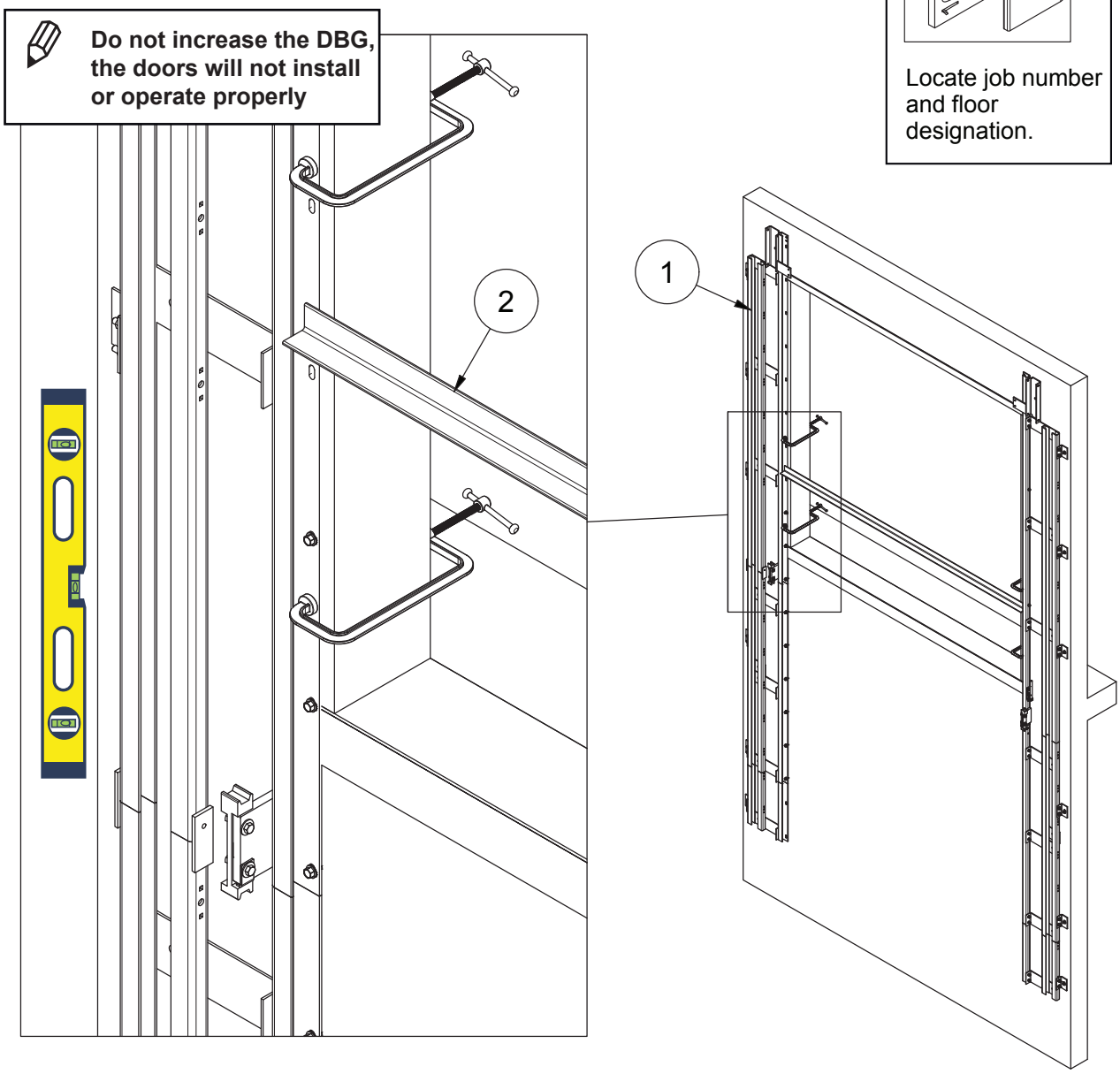


| ITEM | QTY | PART NO | DESCRIPTION |
|---|---|---|---|
| 2 | 1 | 771028 | GAUGE ROD (50 mm [2 in] ANGLE) |
| 1 | 1 | 771006 | LEFT COUNTER WEIGHT RAIL ASSY |

## 18. SPREADER INSTALLATION

771005-06

- Install spreader between rails with hardware provided.
- Install the counterweight stops below the rails

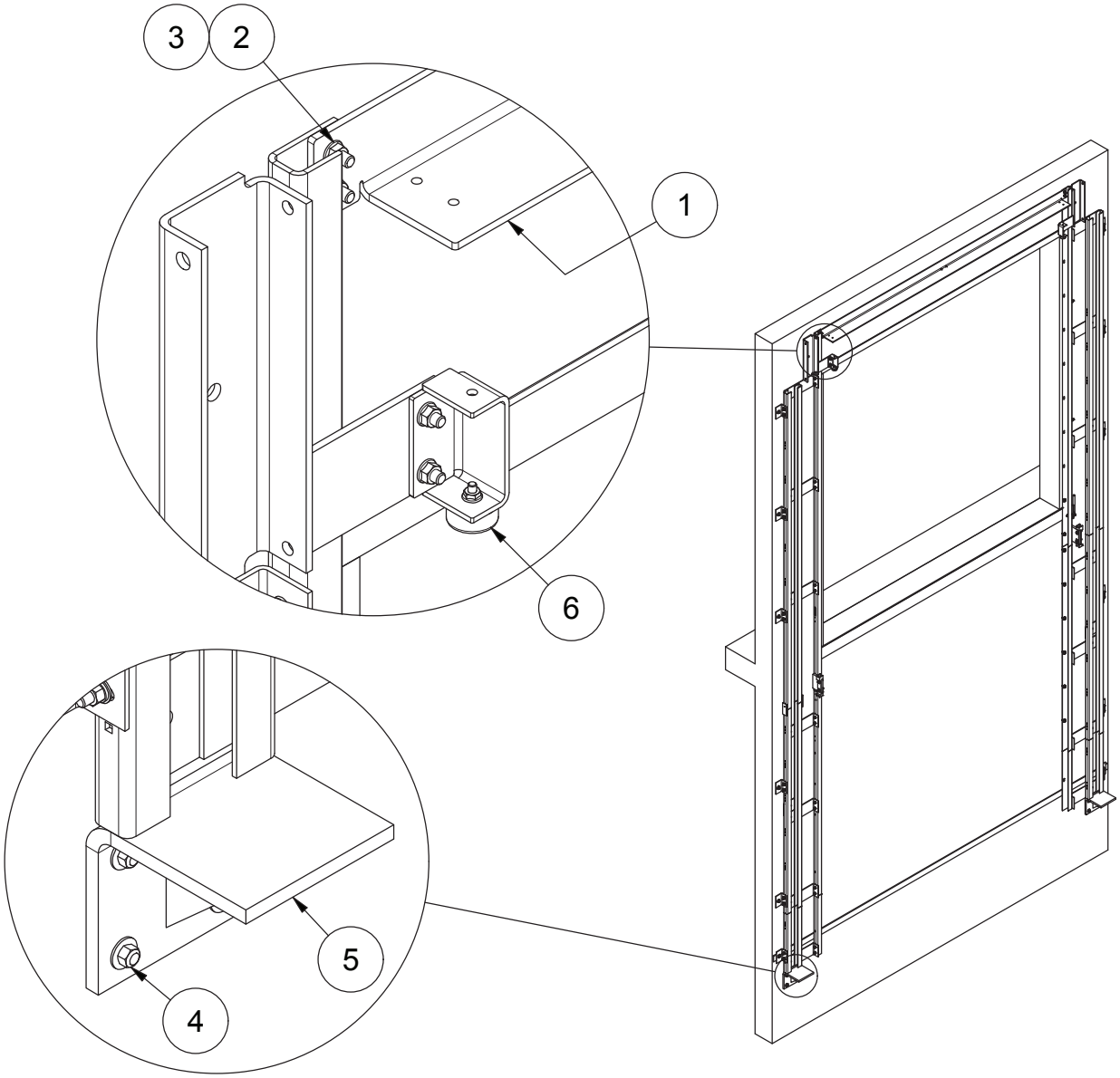


| ITEM | QTY | PART NO | DESCRIPTION |
|---|---|---|---|
| 6 | 2 | 0610L | GATE BUMPER ASSY |
| 5 | 2 | 771021 | COUNTERWEIGHT STOP |
| 4 | 8 | | 1/2" X 2 1/2" Lg DYNABOLT |
| 3 | 4 | 110120345 | 3/8"-16 x 1 1/4" HH BOLT |
| 2 | 4 | 97244 | 3/8-16 SERRATED FLANGE NUT Z |
| 1 | 1 | 771026 | TOP RAIL SPREDER |

## 19. ATTACH CLIP ANGLES TO WALL

771005-07

After all rails are installed, use gauge rod at top and bottom of rails to ensure correct distance apart is maintained.

Use masonry anchor bolts to secure rails to wall, wherever rail clips are provided.

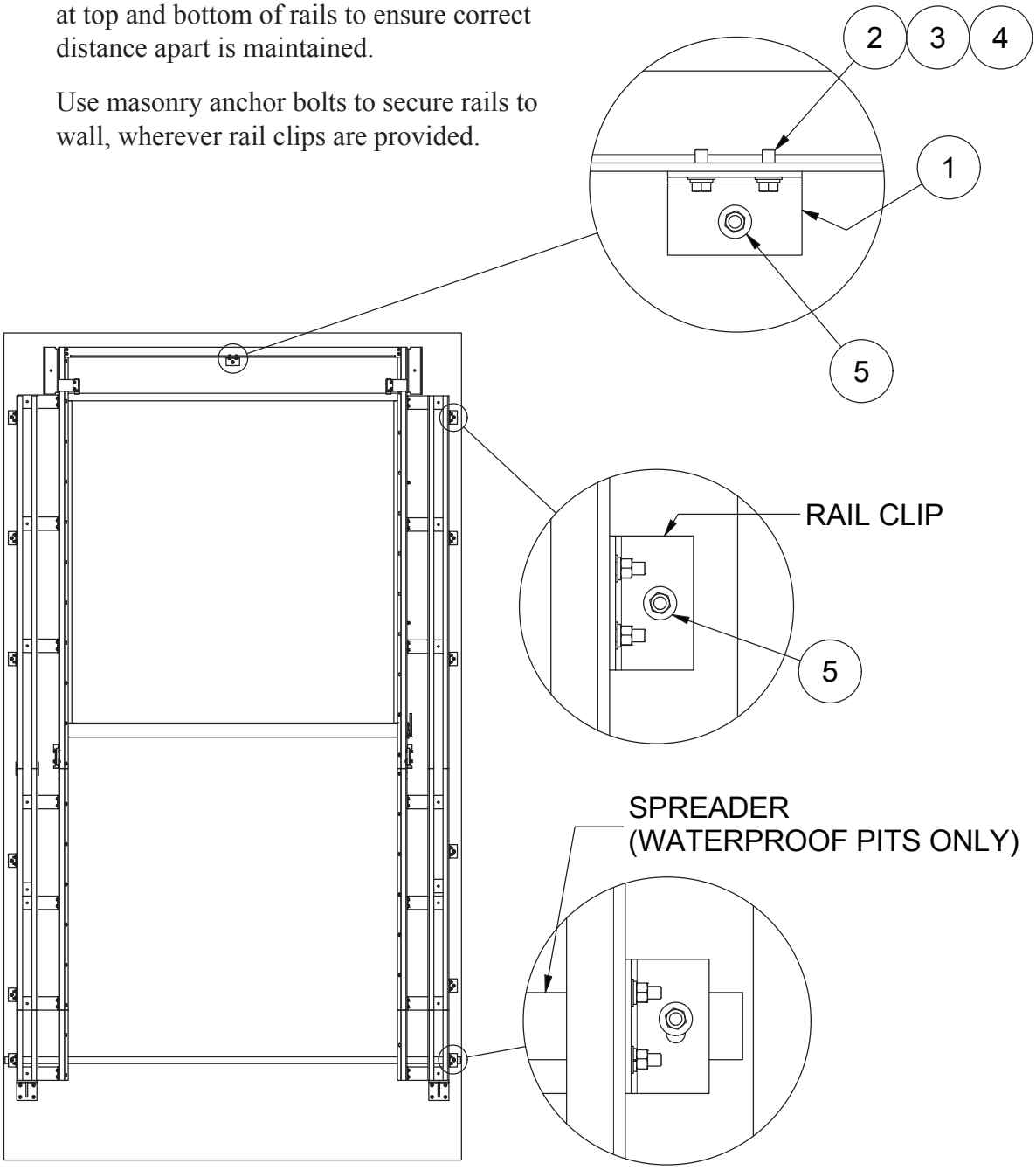


| ITEM | QTY | PART NO | DESCRIPTION |
|---|---|---|---|
| 5 | A/R | | 1/2" X 2 1/2" Lg DYNABOLT |
| 4 | 2 | 800005 | WASHER, LOCK, 3/8" |
| 3 | 2 | 800004 | WASHER, 3/8" |
| 2 | 2 | 800061 | 3/8-16 x 1 HH BOLT ZP |
| 1 | 1 | 066936 | ANGLE BRACKET |

## 20. OPERATORS

771005-08

Slide up doors require two power operators for power doors or manual sheaves for manually operated doors.

1) To start, position operators in the center of the slots.
2) Tighten bolts, adjustments will be made later.

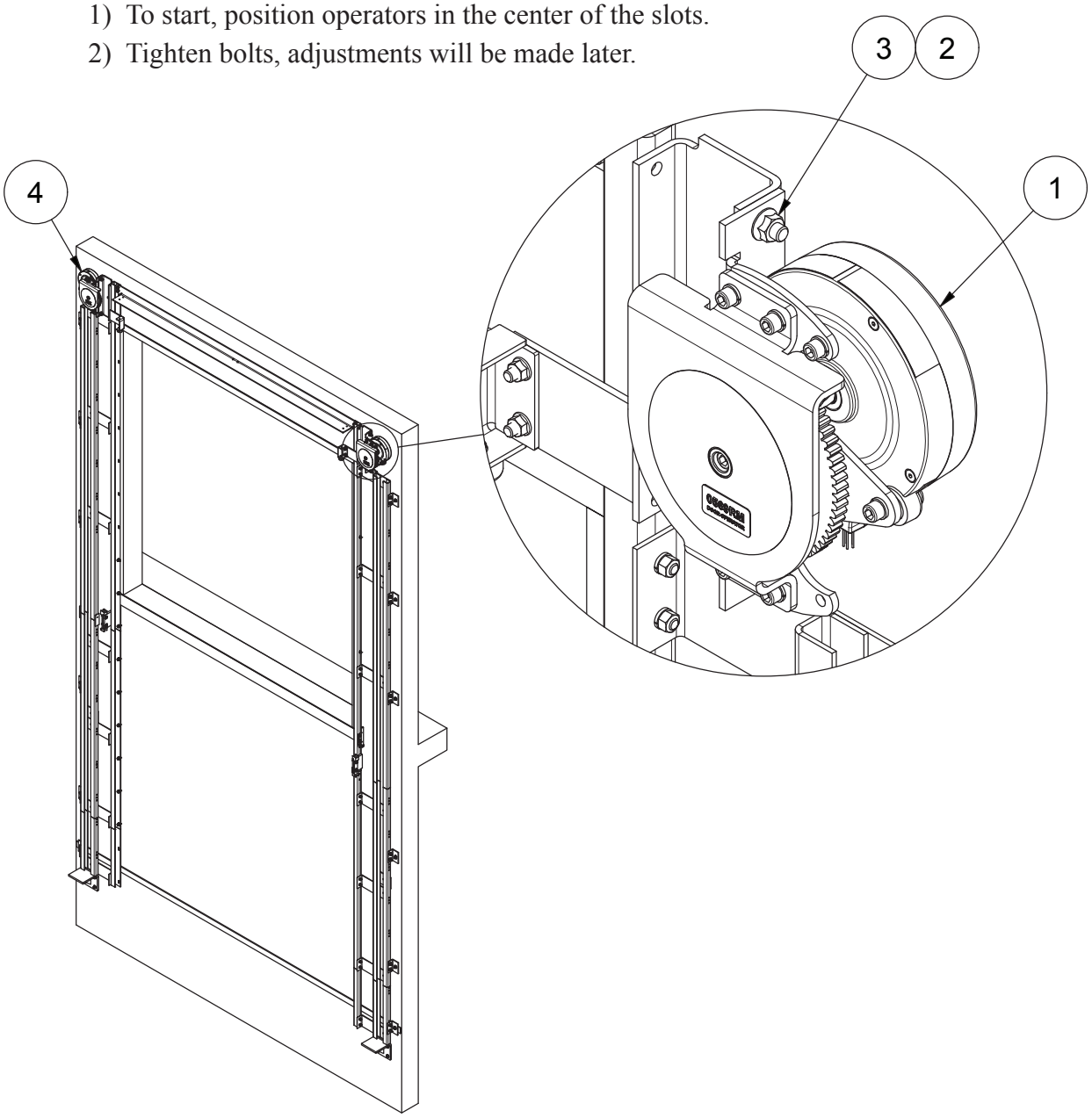


| ITEM | QTY | PART NO | DESCRIPTION |
|---|---|---|---|
| 4 | 1 | 0569LM | OPERATOR ASSY |
| 3 | 4 | 1137345 | 1/2-13 HEX SERRATED FLANGE NUT |
| 2 | 4 | 110120379 | 1/2"-13 x 1 1/4" Lg HEX HD BOLT ZP |
| 1 | 1 | 0569RM | OPERATOR ASSY |

## 21. PLUG ROD INSTALLATION

771005-09

The tamper resistant plugging device is made up of two components, the plug rod and the plug proof trigger.

**The plug rod must be installed before the interlock.**

1) Locate the plug proof trigger, you will find this already mounted to the door rail.
2) Insert plug rod into the plug proof trigger, screw rod all the way in.
3) Adjust collar so spring is fully compressed when door opens.

**Do not tighten, adjustment will be made later.**

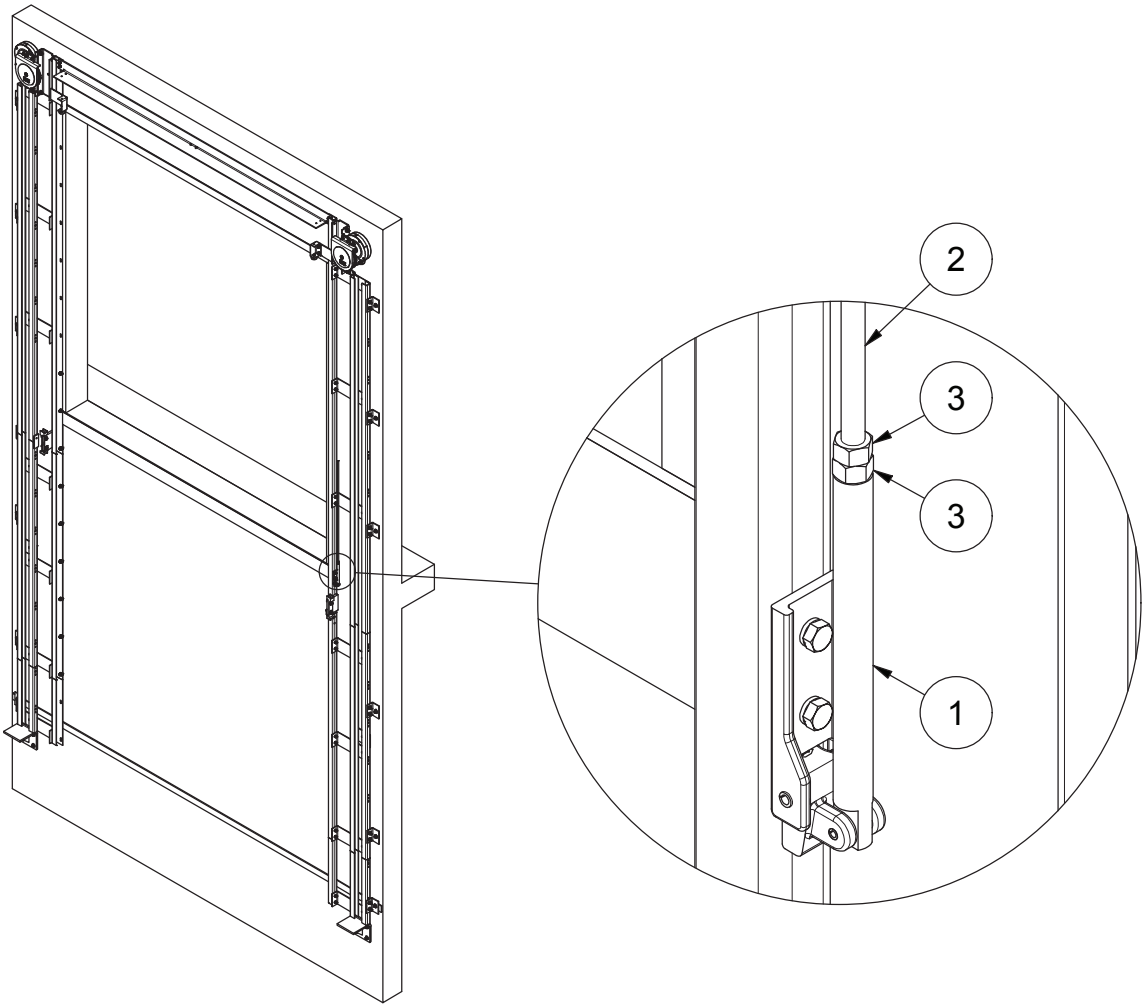


| ITEM | QTY | PART NO | DESCRIPTION |
|---|---|---|---|
| 3 | 6 | 1136106 | 3/8"-16 HEX NUT Z |
| 2 | 1 | 235615-32 | PLUG ROD |
| 1 | 1 | 23561 | CONTACT PLUGGING DEVICE ASSEMBLY |

## 22. INTERLOCK INSTALLATION

771005-10

1) Insert the interlock onto the plug rod and align interlock slots with mounting holes.
2) Loosely tighten the bolts. Vertical position of interlock will be set later.
3) Where provided install adjustable extended roller arm without filler.

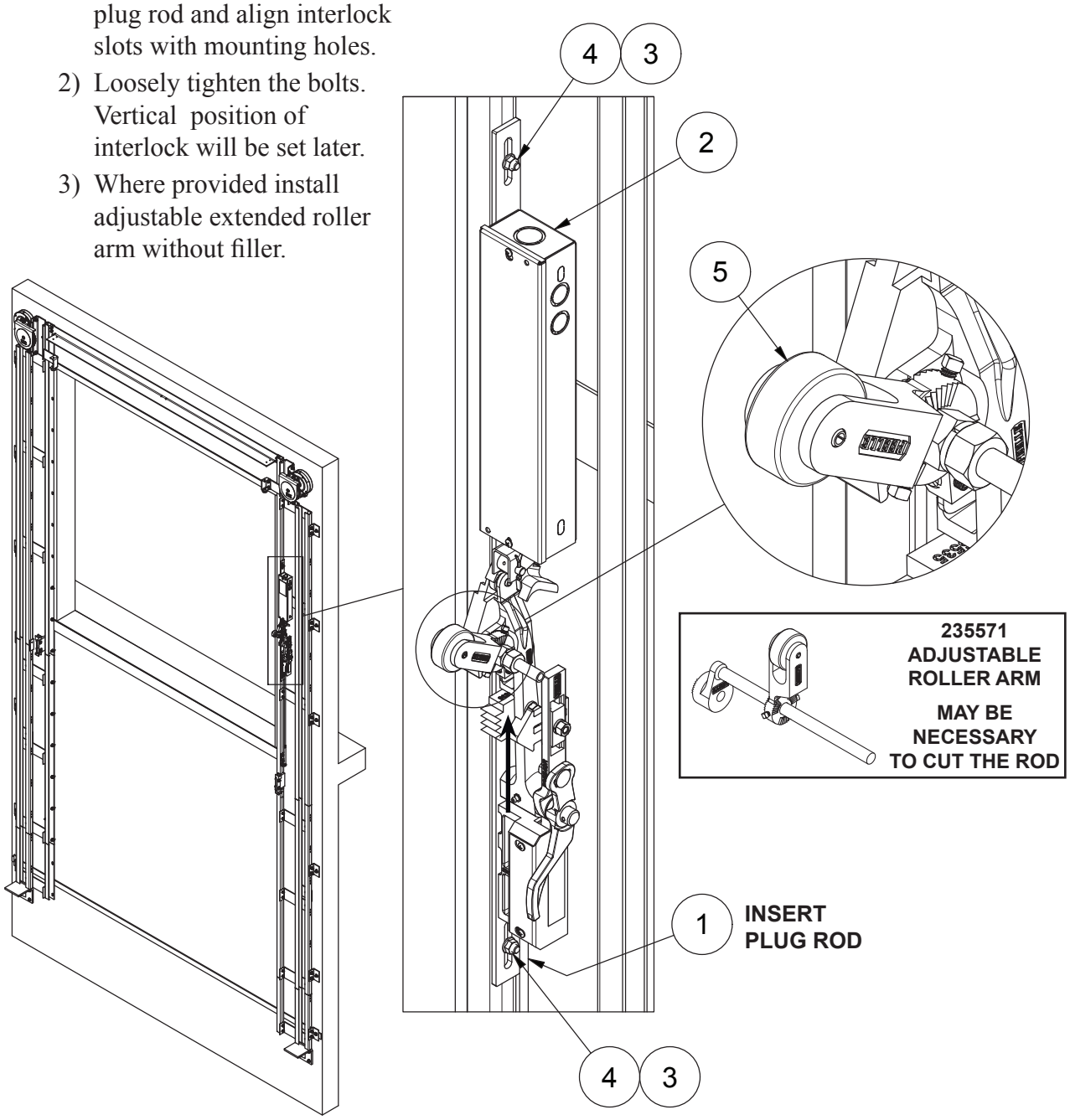


| ITEM | QTY | PART NO | DESCRIPTION |
|---|---|---|---|
| 5 | 1 | 035562 | REGULAR ROLLER ARM ASSY |
| 4 | 4 | 97244 | 3/8-16 SERRATED FLANGE NUT Z |
| 3 | 3 | 13105 | 3/8"-16 x 1" HH BOLT |
| 2 | 1 | 2356-67RU | INTERLOCK |
| 1 | 1 | 235615-32 | PLUG ROD |

## 23. POSITION ENCODER INSTALLATION

771005-11

For power doors with wireless controllers install the positional encoder on the interlock side.

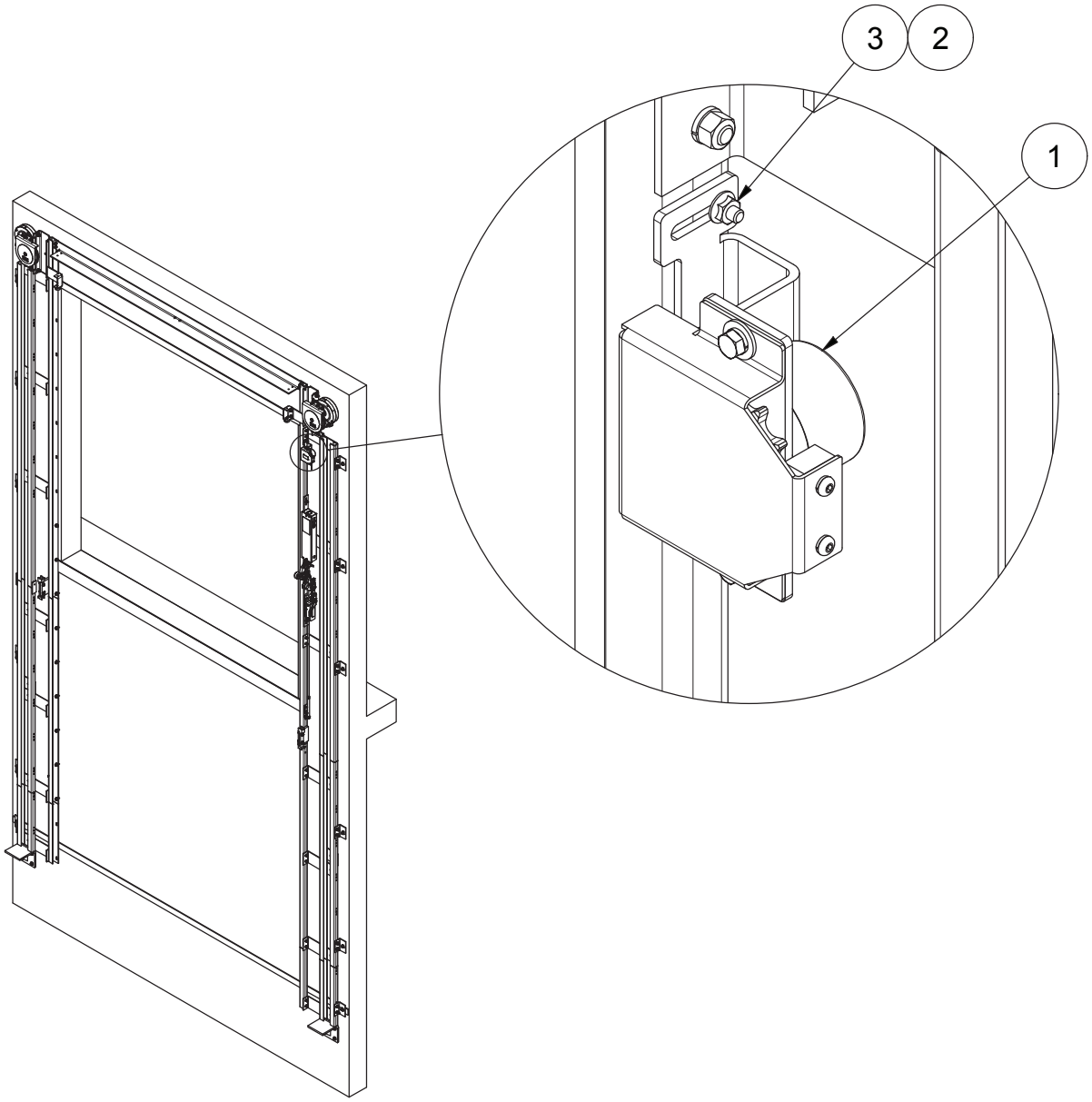


| ITEM | QTY | PART NO | DESCRIPTION |
|---|---|---|---|
| 3 | 2 | 1137337 | 1/4-20 SERRATED HEX NUT Z |
| 2 | 2 | 110120304 | 1/4"-20 x 1" Lg HEX HD BOLT Z |
| 1 | 1 | 2578 | DOOR ENCODER IDLER |

770804-02

## 24.1. INSTALL A HOIST OR CHAIN FALL

- Mount the chain fall directly to the hoistway wall above the opening.
- Center hoist above the opening
- Mount hoist high enough to lift upper panel to open position (i.e. > 1 1/2 Opening height from the floor)

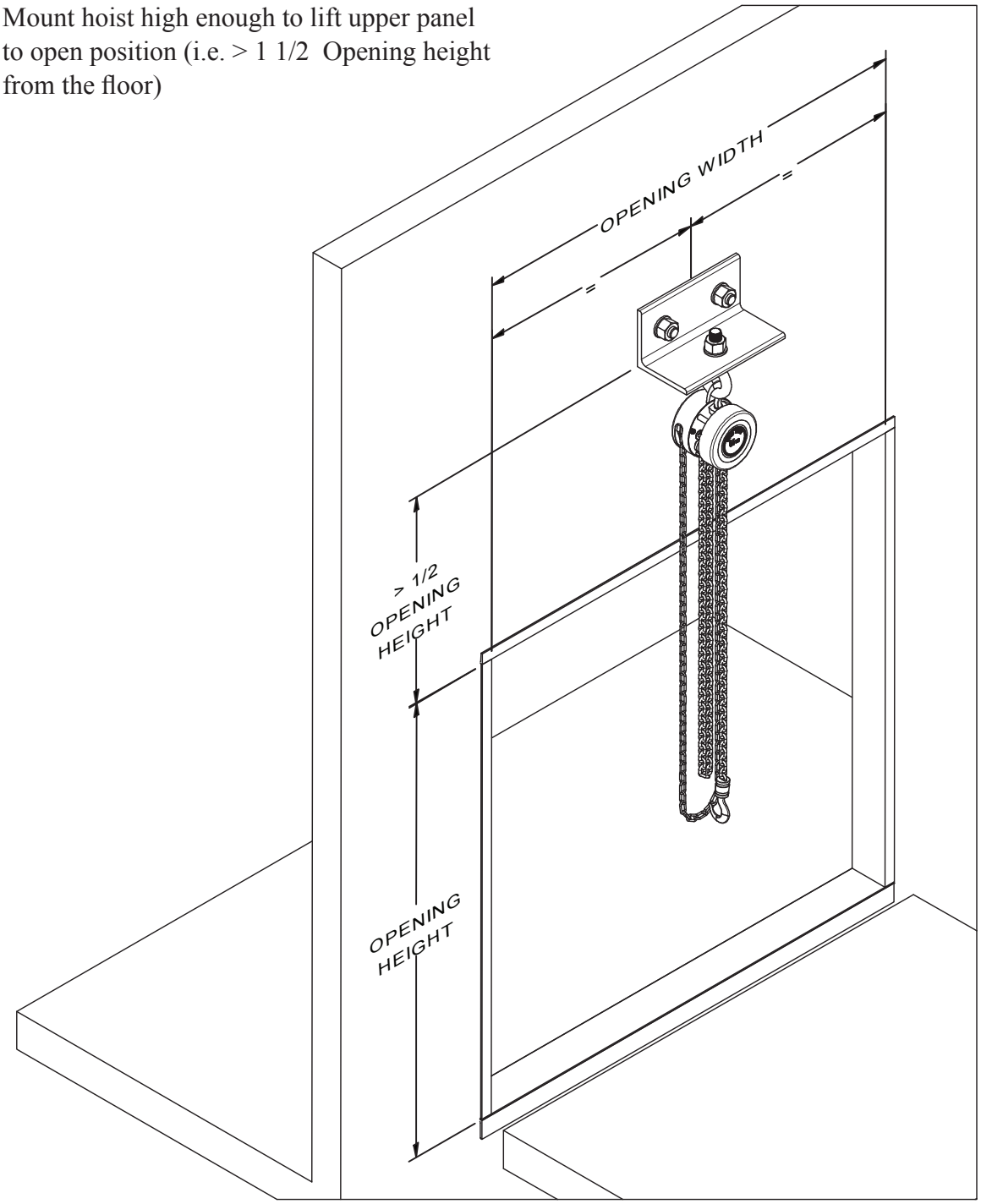

## 24.2. POSITION PANEL CRATE AND CONNECT STRAPS

770804-04

- Locate the correct panel for the opening.
- All panels are marked on the shoebar with the Job Number and floor designation
- Center the crate in the opening.
- Secure two straps to the panel.
- Use the choke method.
- Connect each strap to the chain fall.

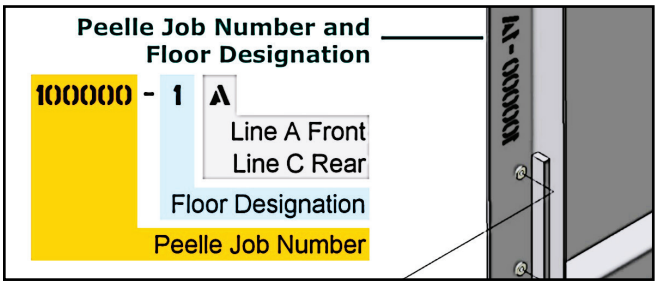


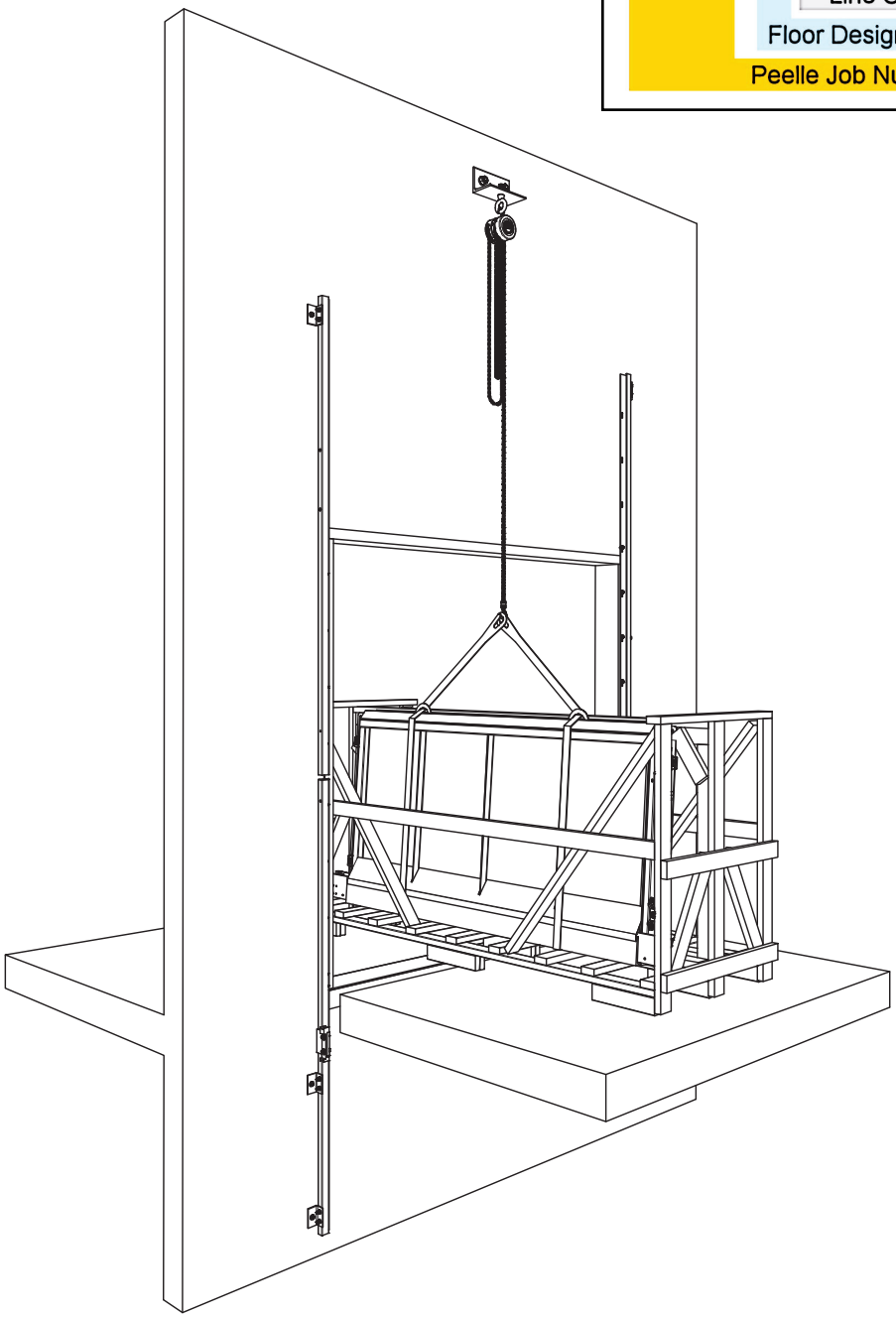

## 24.3. LIFT PANEL AND REMOVE CRATE

770804-05

- Hoist panel off the crate.
- Remove the crate from the opening.
- Position two support blocks on floor.

**#0606 Door Dolly may be required to help position panel.**

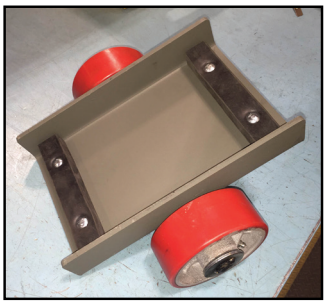

**0606 DOOR DOLLY**

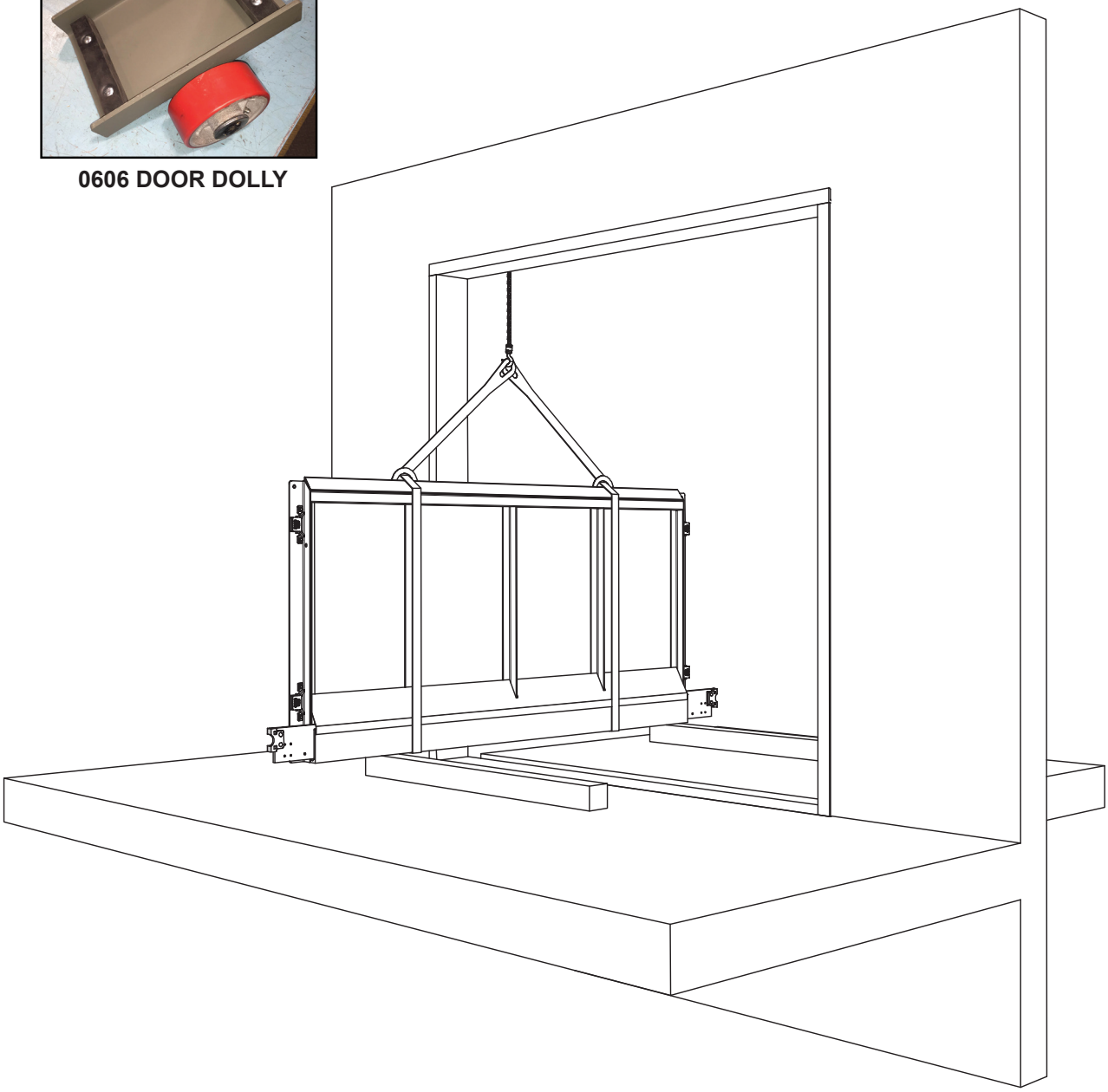

## 24.4. ROTATE THE PANEL

770804-06

**Panels are shipped upside down (heavy side down)**

- Lower the panel onto the blocks.
- Reposition the straps, to pickup from the top of the panel.
- Lift the panel into the upright position.
- Lift panel to upright position.

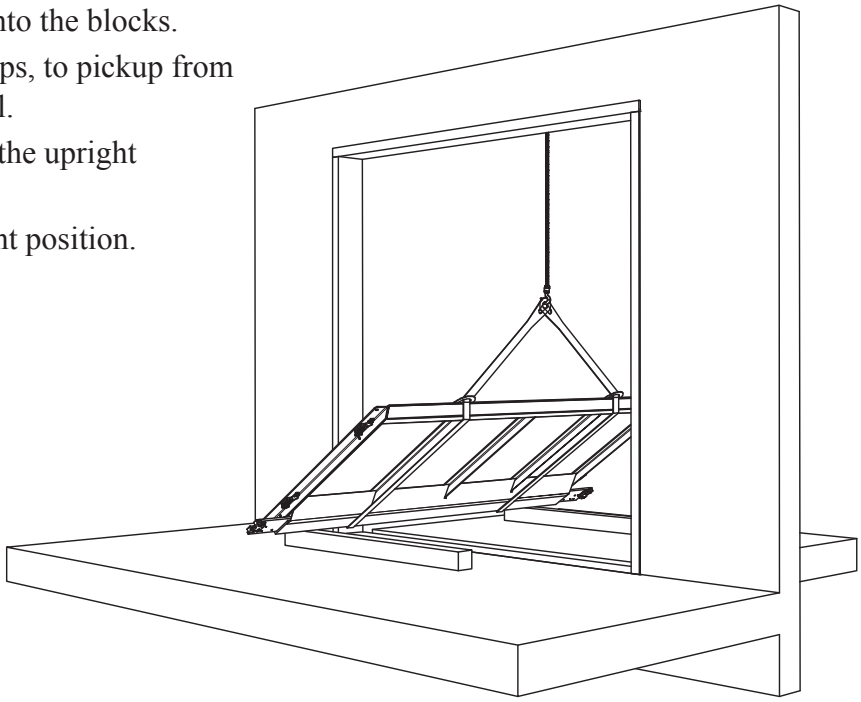

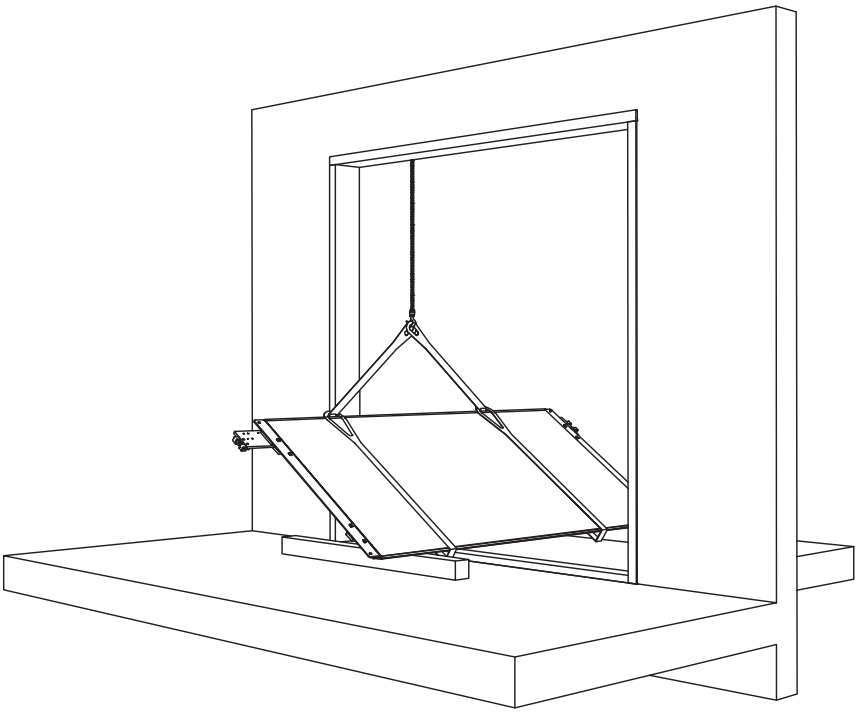

## 24.5. HOIST THE PANEL INTO POSITION

770804-08

➤ Hoist the panel into position ready for insertion into landing door rials.

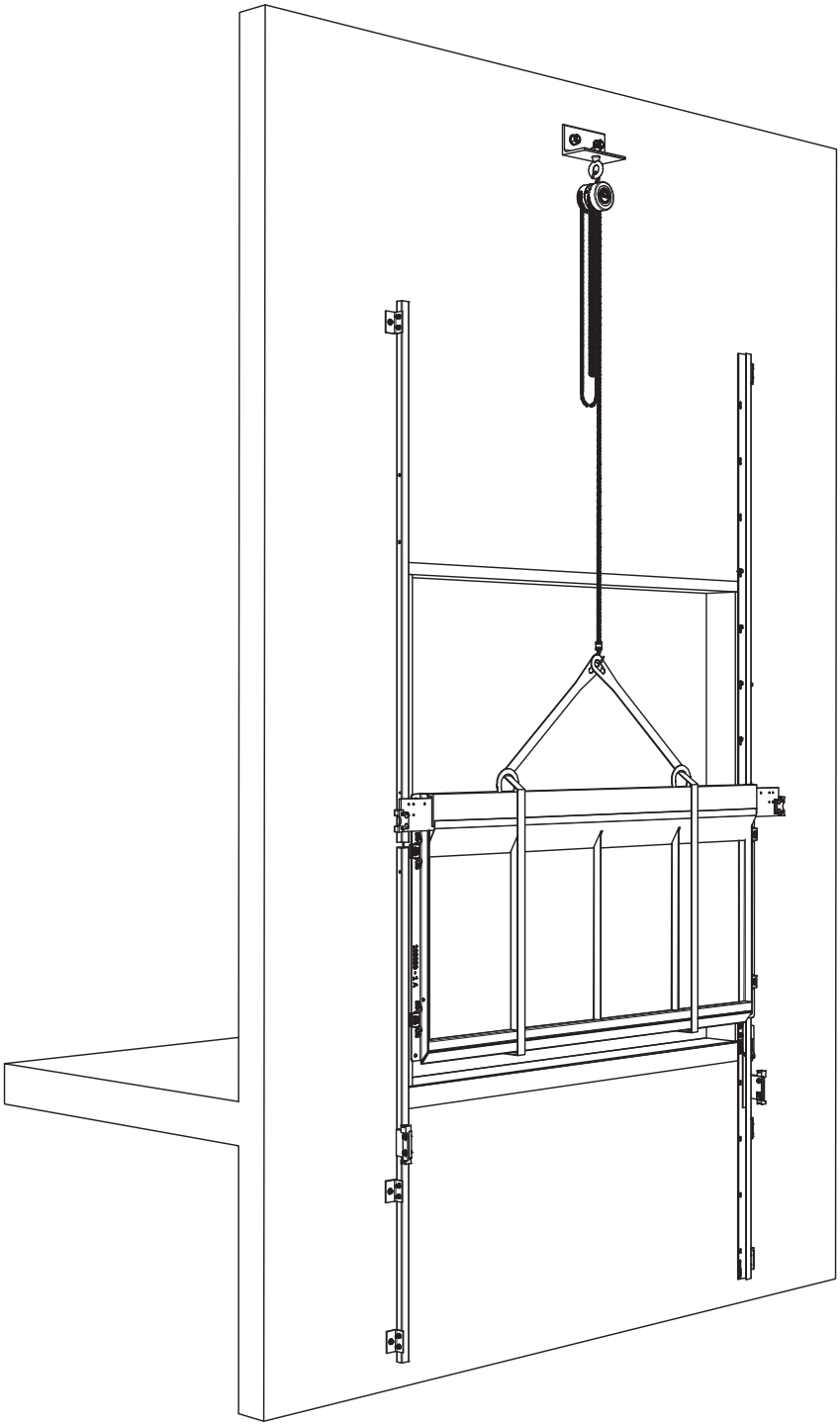

## 24.6. INSTALL THE LOWER DOOR PANEL

- Remove shoes from the small shoebar (one side of the panel)
- Position the panel inside the landing door rails.
- Engage the shoes.
- Re-attach the shoes on the opposite side.
- Lower the panel to rest on the door stops.
- Remove the straps.

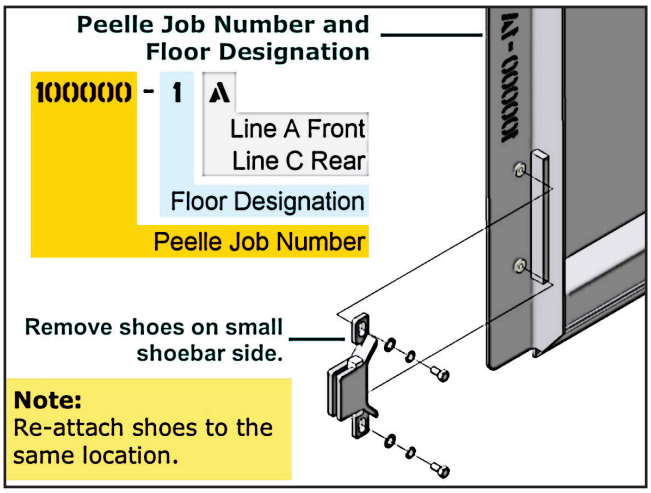


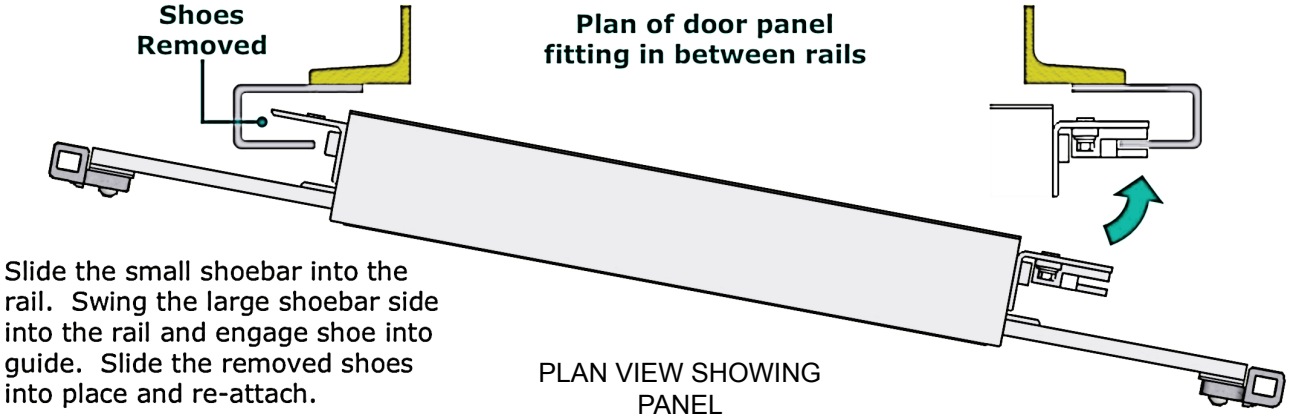


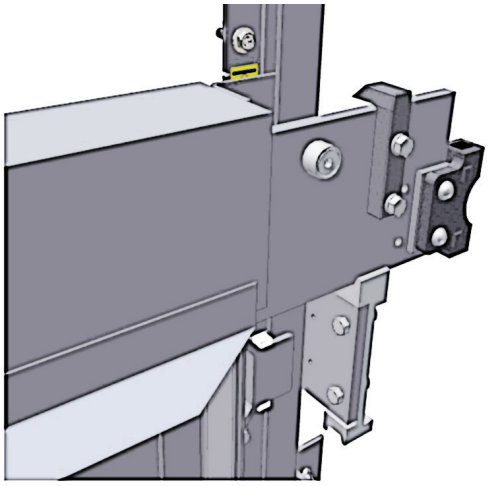

Rest the lower door panel on the door stops

## 25. COUNTERWEIGHT INSTALLATION

770278-09

1) Attach the counterweight guide shoes
2) Hoist counterweight into place
3) Set the top of the counterweight flush with the track
4) Support the counterweight using wood blocks

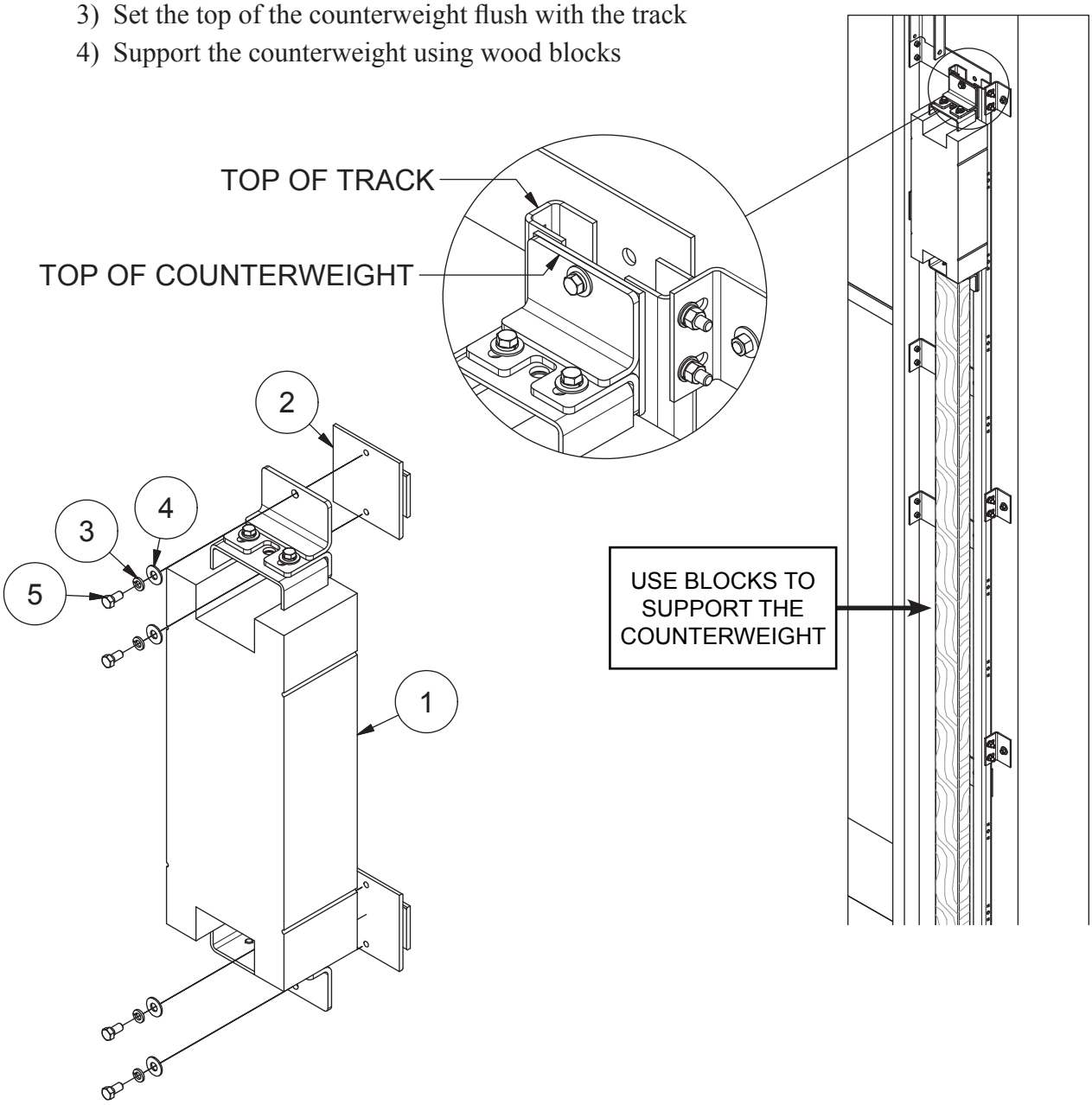


| ITEM | QTY | PART NO | DESCRIPTION |
|---|---|---|---|
| 5 | 8 | 110120342 | 3/8-16 x 3/4" HEX CAP SCREW Z |
| 4 | 8 | 1133008 | 3/8" FLAT WASHER Z |
| 3 | 8 | 1133622 | 3/8" LOCK WASHER Z |
| 2 | 2 | 0260 | DOOR COUNTER WEIGHT SHOE |
| 1 | 1 | 770304 | COUNTERWEIGHT |

## 26. CHAIN SUSPENSION OVERVIEW

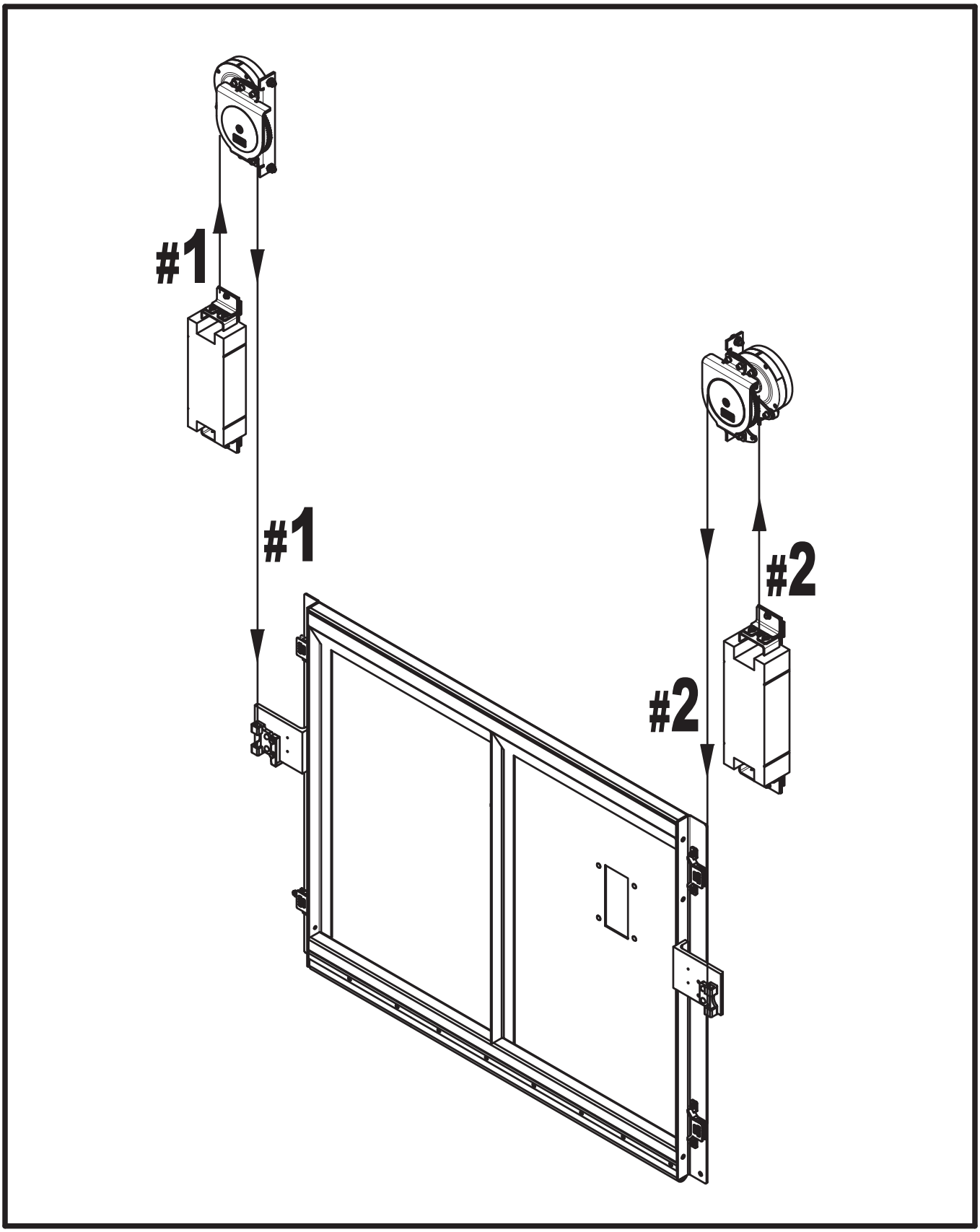

## 27. CHAIN CONNECTION DETAIL

771001-01

**To remove links you will need to grind off the head of the pin. Then use the Use the Peelle #0608 Chain Pin Extractor to pop out the pin.**

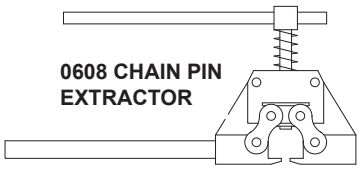


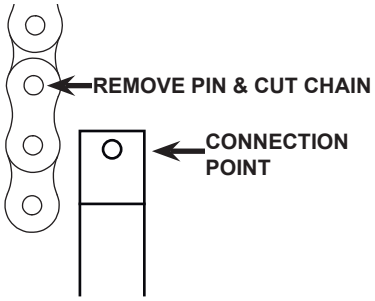


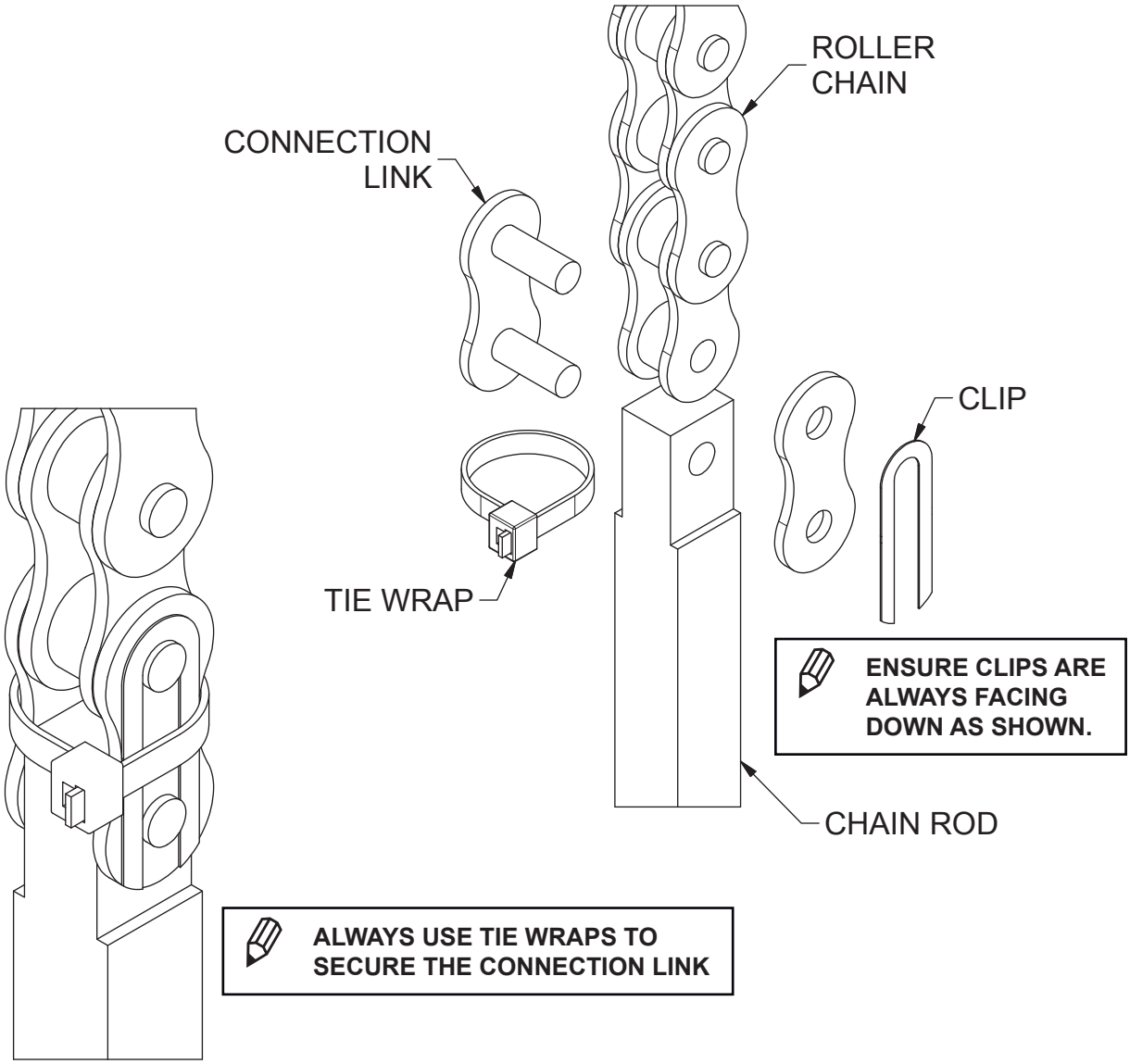


**ENSURE CLIPS ARE ALWAYS FACING DOWN AS SHOWN.**

**ALWAYS USE TIE WRAPS TO SECURE THE CONNECTION LINK**

## 28. PANEL ROPING

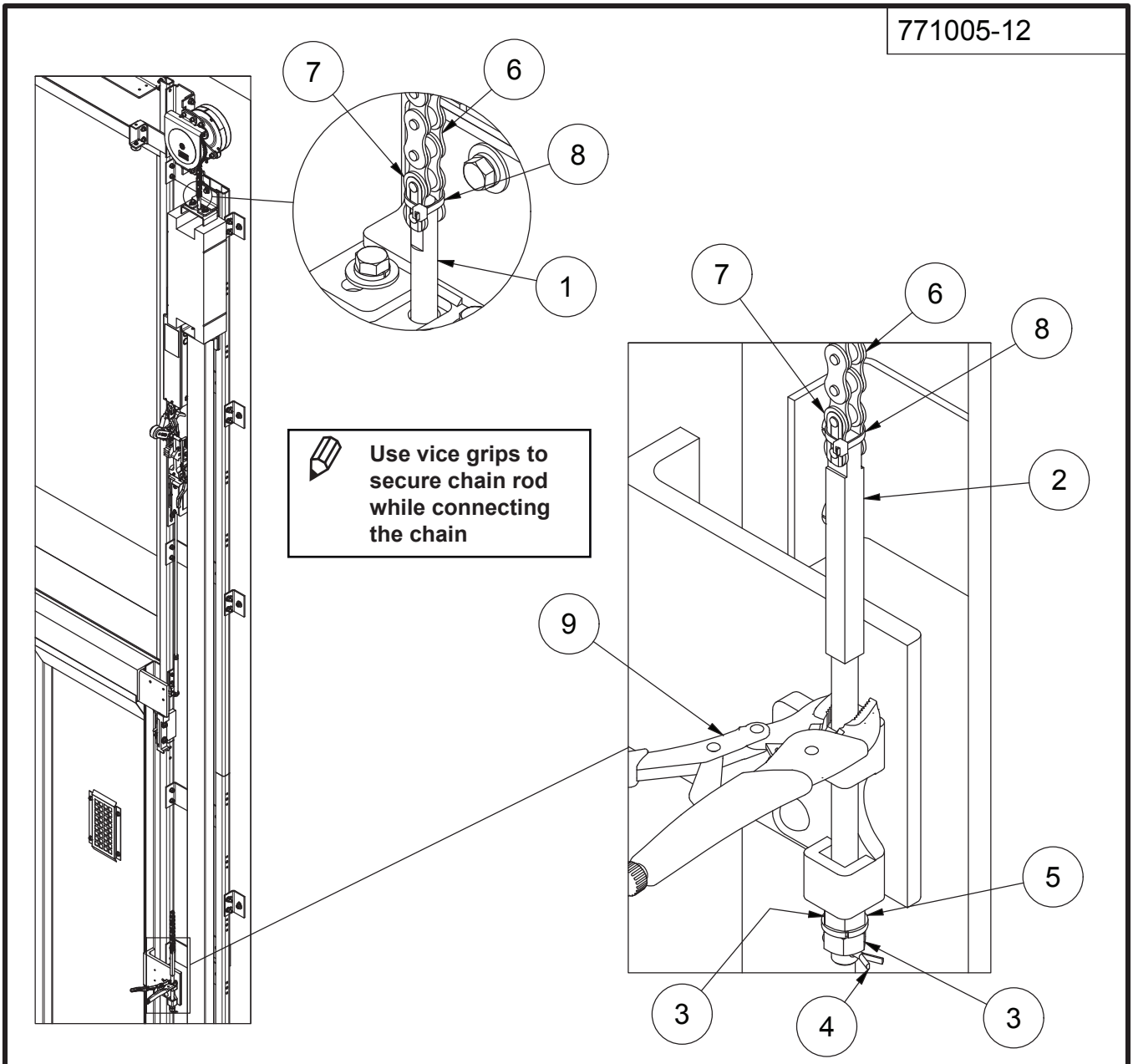


| ITEM | QTY | PART NO | DESCRIPTION |
|---|---|---|---|
| 9 | 2 | 770483 | VICE GRIPS |
| 8 | 4 | 63123 | 6" TIE WRAP (CABLE TIE) |
| 7 | 4 | 01792 | CONNECTING LINK |
| 6 | 2 | 771029 | ROLLER CHAIN |
| 5 | 3 | 1133626 | 1/2 LOCK WASHER Z |
| 4 | 2 | 65076 | 1/8" x 1" Lg COTTER PIN |
| 3 | 4 | 1136110 | 1/2-13 HEX NUT Z |
| 2 | 2 | 018061 | CHAIN ROD, 12" |
| 1 | 2 | 018064 | CHAIN ROD, 4" |

## 29. RATCHET PIECE

771005-13

Install ratchet piece. use two shims for initial installation.
Position will be adjusted later.

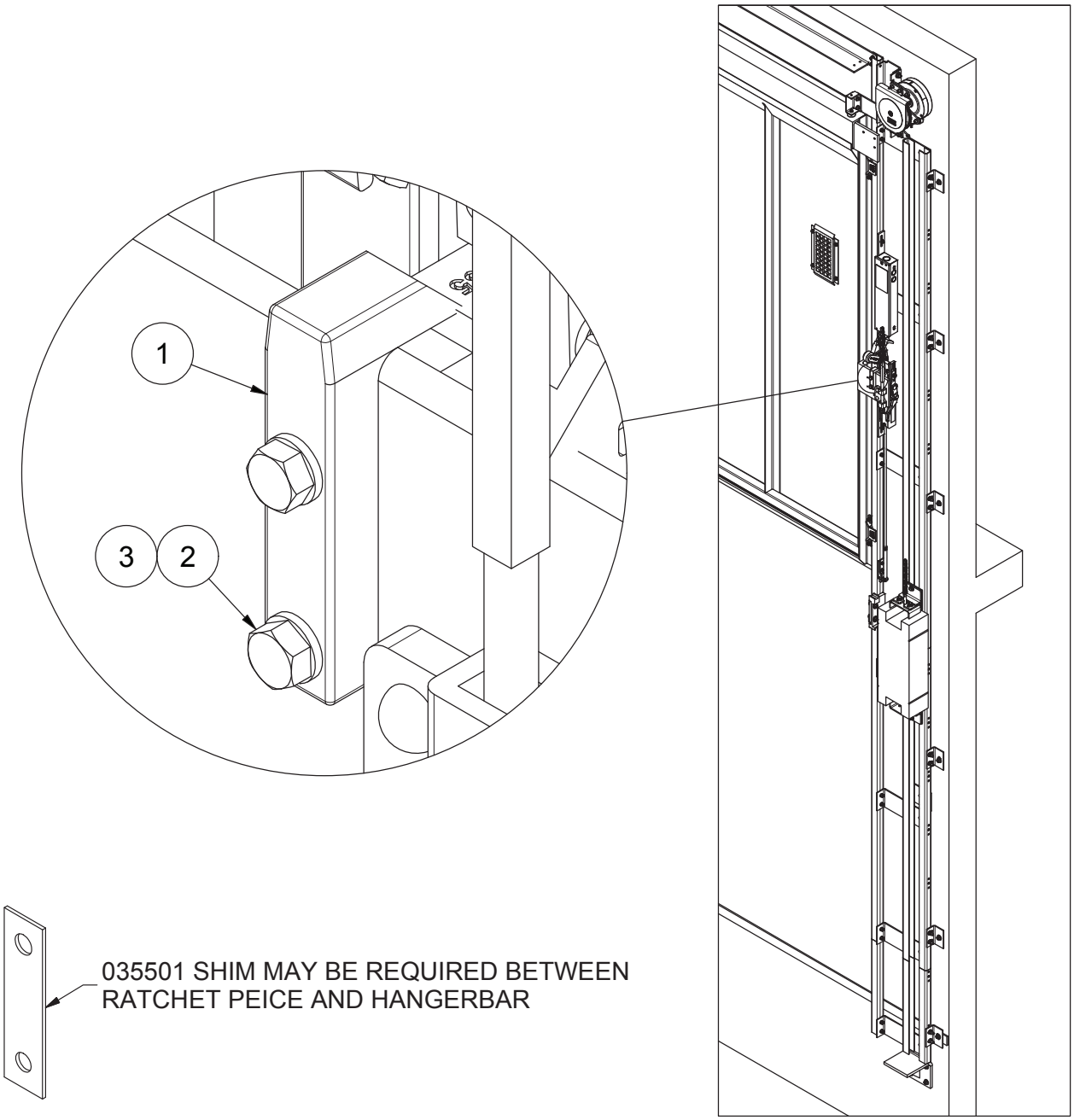


| ITEM | QTY | PART NO | DESCRIPTION |
|---|---|---|---|
| 3 | 2 | 800005 | WASHER, LOCK, 3/8" |
| 2 | 2 | 110120345 | 3/8"-16 x 1 1/4" HH BOLT |
| 1 | 1 | 235534 | RATCHET PIECE |

## 30. EMERGENCY UNLOCKING DEVICES

Door Emergency Unlocking Devices are provided for each landing except jurisdictions which restrict their use. Check local code and Peelle layout Drawing L-1. The unlocking device is used to unlock a hoistway landing door for access to the hoistway shaft by authorized personnel. It is mounted on the wall next to the door. It is operated by a key that unlocks a box and exposes a chain. The chain is pulled to unlock the door. See ***(Figure 2).***

To install the unlocking device, a hole must be drilled through the building wall for the chain. Use an electric hammer drill. Make sure the hole is drilled so that the unlocking device pull chain will meet the interlock roller. Attach the chain to the interlock roller arm with a 1/2 in nut see ***(Figure 2).*** When the device cover is locked in closed position, there should be enough slack in the chain to let the locking arm rest in its locked position.

For power doors, a switch inside the unlocking device prevents power door operation when the door unlocking device is unlocked. Make sure power for door operation is not available after the key that unlocks the device is turned and the chain is pulled. Manual re-activation of door operation is required. If power is available at this time, check the electrical connection of the wires to the unlocking device and the door zone contacts.

The door unlocking device is not to be confused with an access switch, as elevator operation must be completely unavailable when the door unlocking device is in use. Unlocking devices are used instead of access switches when certain requirements are met.

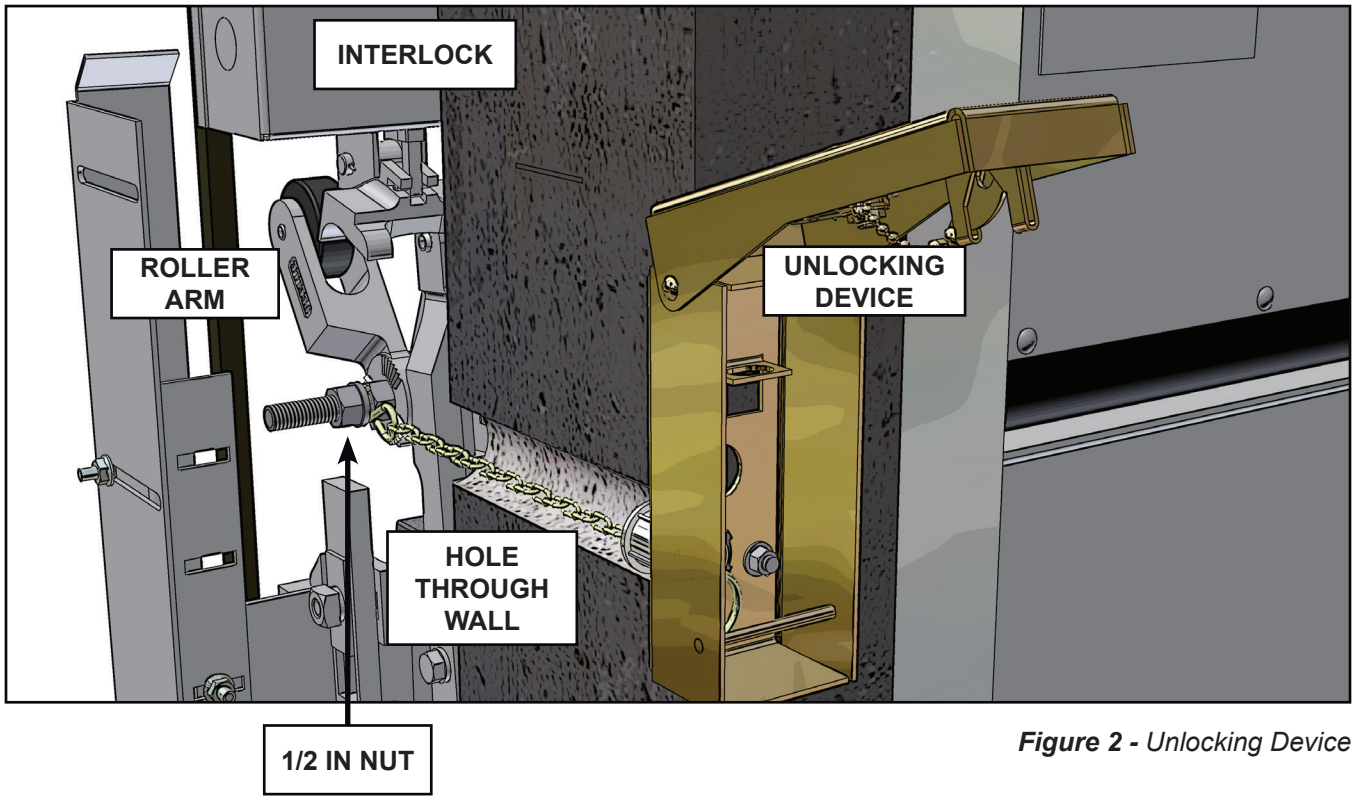


***Figure 2 -*** *Unlocking Device*

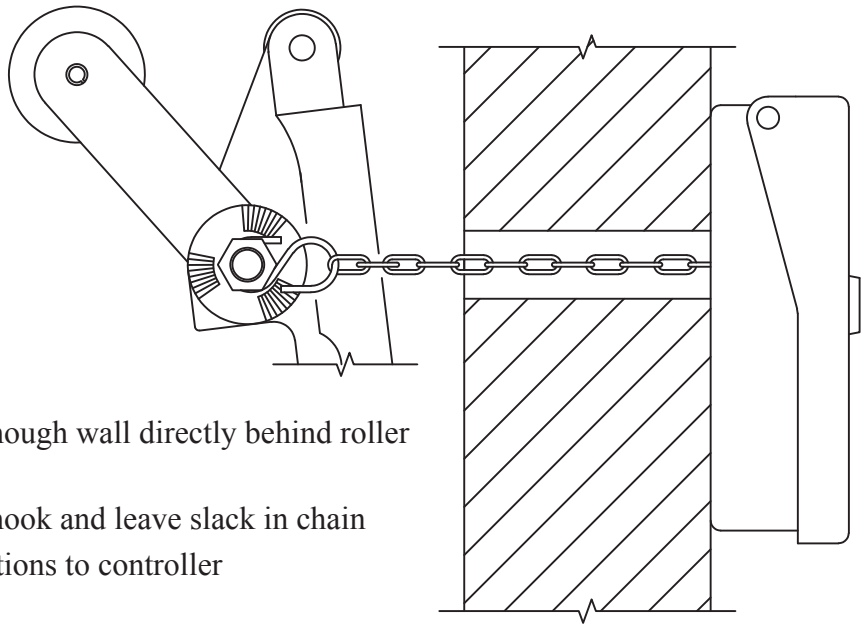

- Drill 1” [25mm] hole though wall directly behind roller arm connection
- Attach chain with “S” hook and leave slack in chain
- Make electrical connections to controller

- For installations on large doors or interlocks mounted low, use the chain redirection kit provided #230068.

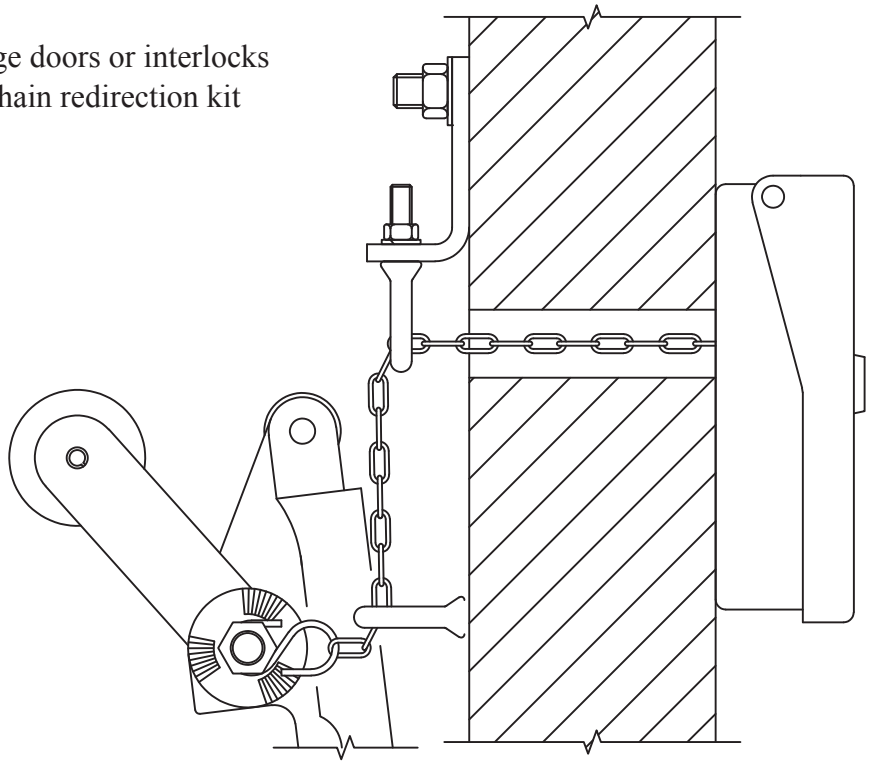

## 31. MICRO SWITCH LIMIT ARRANGEMENT

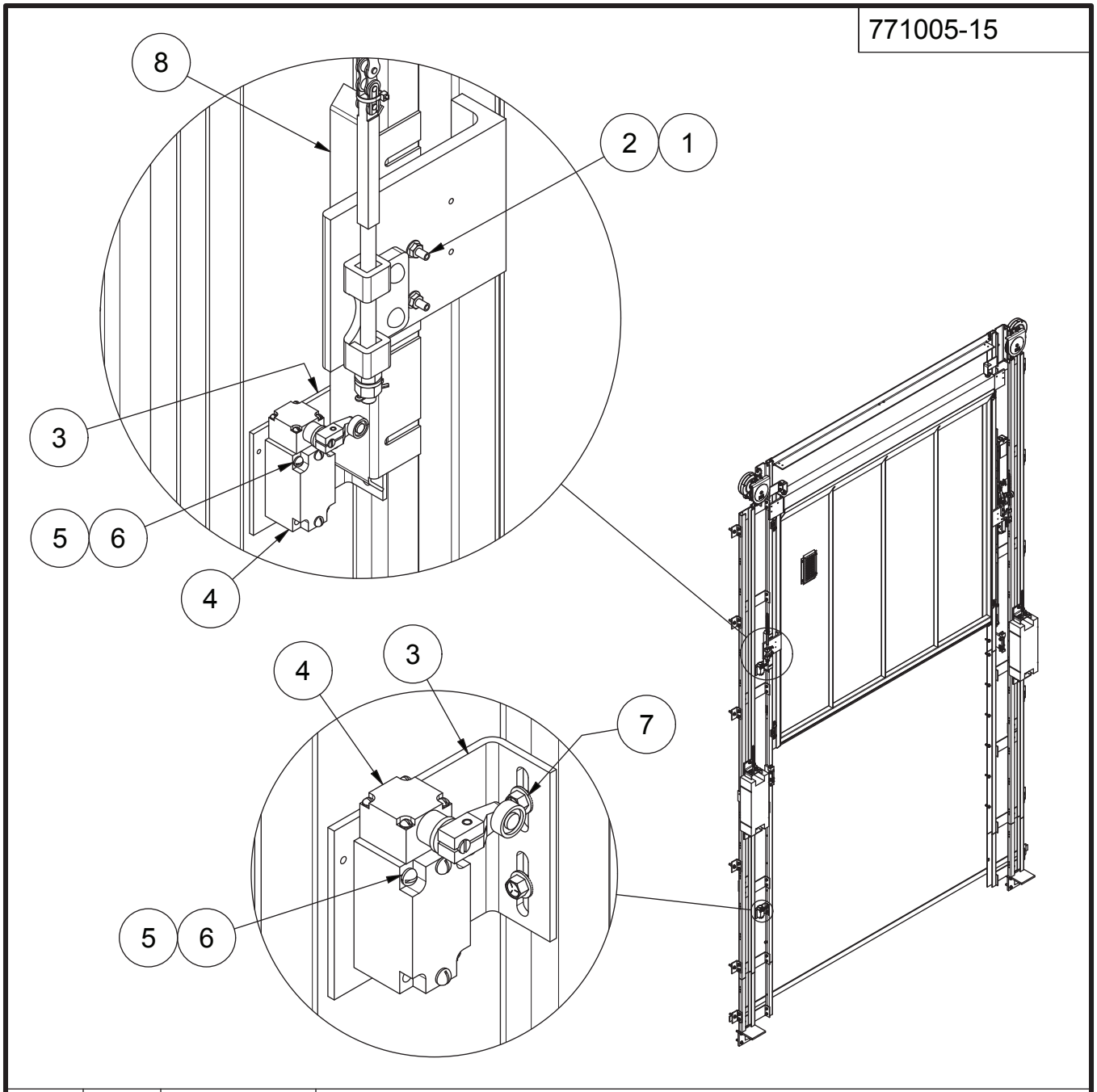


| ITEM | QTY | PART NO | DESCRIPTION |
|---|---|---|---|
| 8 | 1 | 0968053SP | MICROSWITCH CAM |
| 7 | 4 | 1119901 | 1/4-20 x 1/2 HEX HD FLANGE BOLT ZP |
| 6 | 2 | 1133614 | #10 SPLIT LOCK WASHER Z |
| 5 | 2 | 28990 | #10-24 x 1 1/2" Lg ROUND HD SCREW ZP |
| 4 | 2 | 09686 | MICROSWITCH |
| 3 | 2 | 096862 | DOF / ASO BRACKET |
| 2 | 2 | 21157 | 1/4-20 x 1 1/4 CARRIAGE BOLT ZP |
| 1 | 2 | 800064 | 1/4-20 SERRATED FLANGE HEX NUT ZP |

## 32. FINAL ADJUSTMENTS

771005-14

**PERFORM THE FINAL ADJUSTMENTS ON THE LISTED COMPONENTS.**

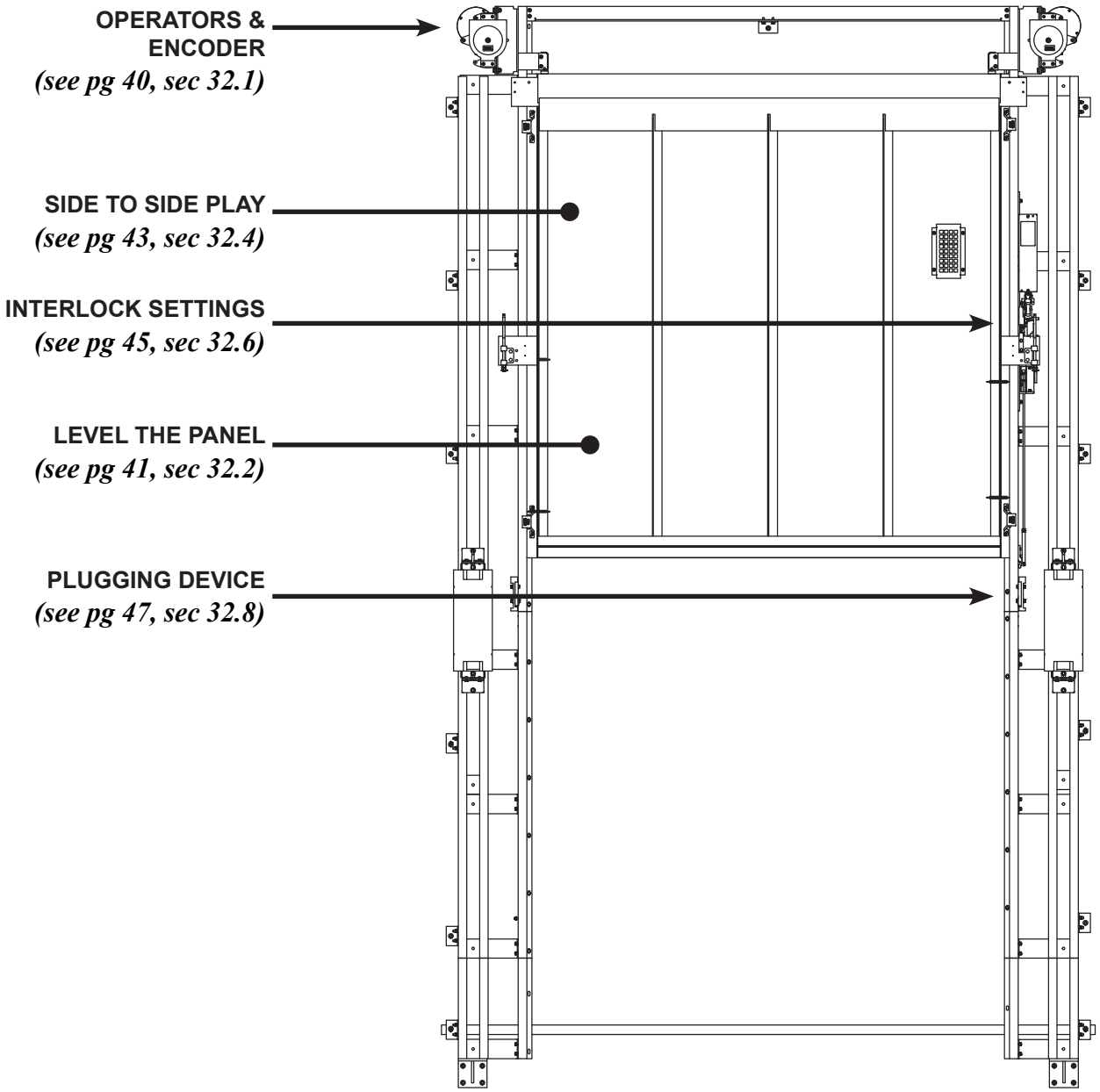

## 32.1. OPERATOR ADJUSTMENT

770028-45

1) Adjust the door operator using the mounting slots, ensure the center of sheave and chain rod are in line (keep door chain perfectly vertical).
2) Adjust the door encoder (if supplied), ensure the encoder sprocket rides smooth along the chain.

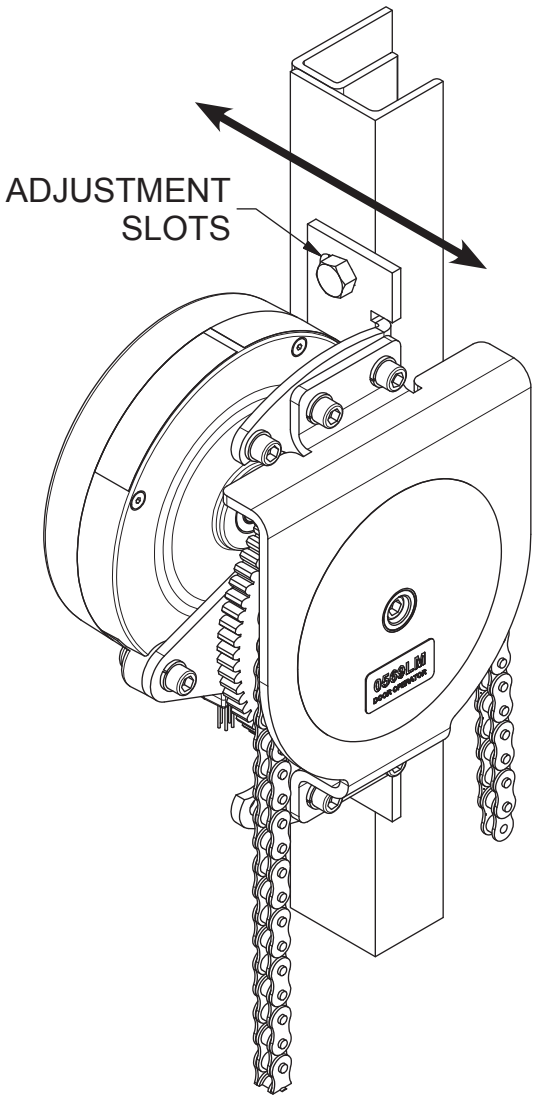


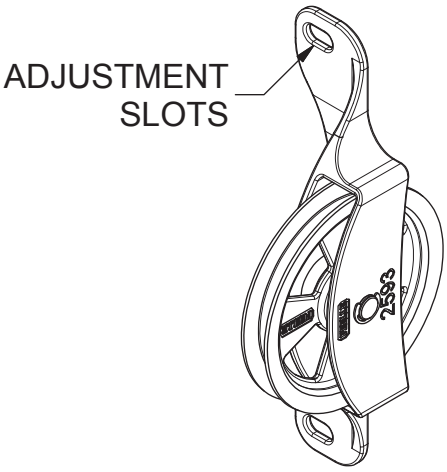


**2593 MANUAL SHEAVE**

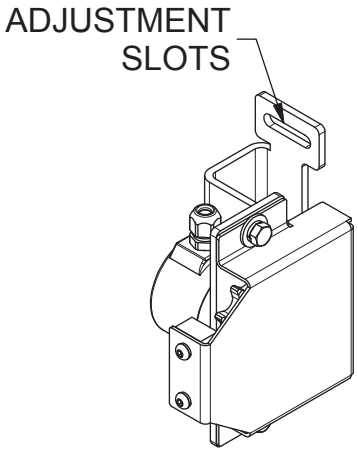


**2578 DOOR ENCODER**

## 32.2. LEVEL THE PANELS

770278-29

### TO BEGIN

- Close the door panels.
- Adjust nuts on all rods & studs so they are against the cotter pin.
- This allows for the easy future chain stretch adjustment
- If there is slack in the chain, remove chain links.

### CHECK OPENING AND CLOSING SEQUENCE

Ensure panels are level and parallel with each other during the full open and close operation.

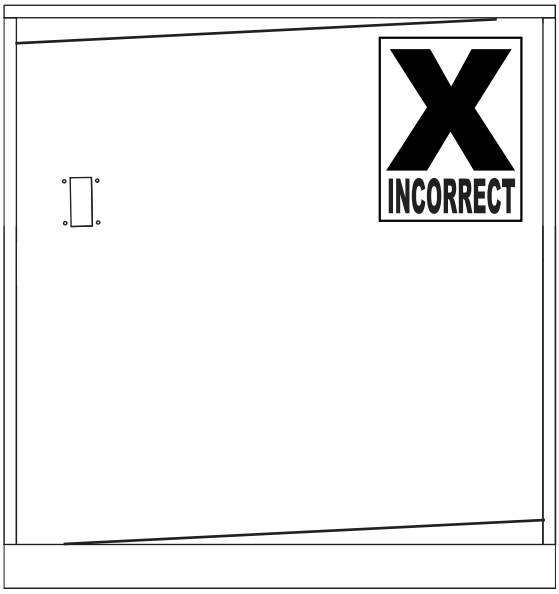


### ADJUSTMENTS

#### UPPER PANEL ADJUSTMENTS

With doors in the closed position, adjust the chain stud nuts (on the spreader) to raise and lower the upper panel.

#### COUNTERWEIGHT ADJUSTMENT

With doors in the closed position, adjust the chain rod nuts (on the lower panel) to raise and lower the counterweight position.

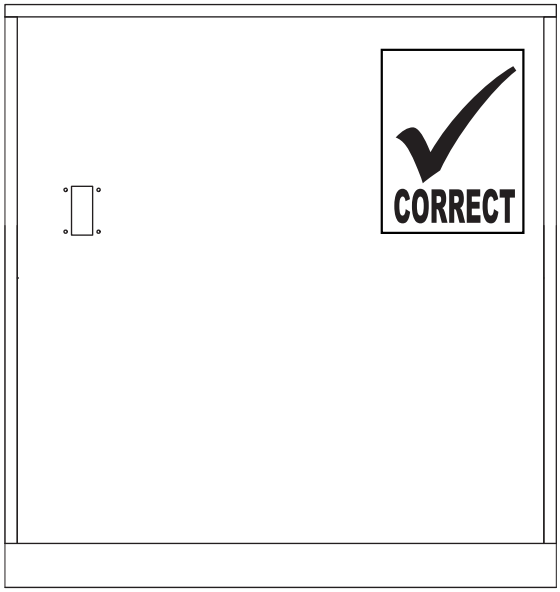


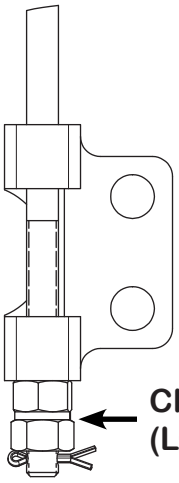

CHAIN ROD NUTS (LOWER PANEL)

## 32.3. LOWER PANEL ADJUSTMENT

770468-23

Ensure Lower Panel Trucking Sill is level with the building sill.

If final adjustment is needed, adjust the 04204 Sill Stop Casting, to raise or lower the panel open position.

There is an 8-way adjustment by flipping, rotating and spacing the stop casting.

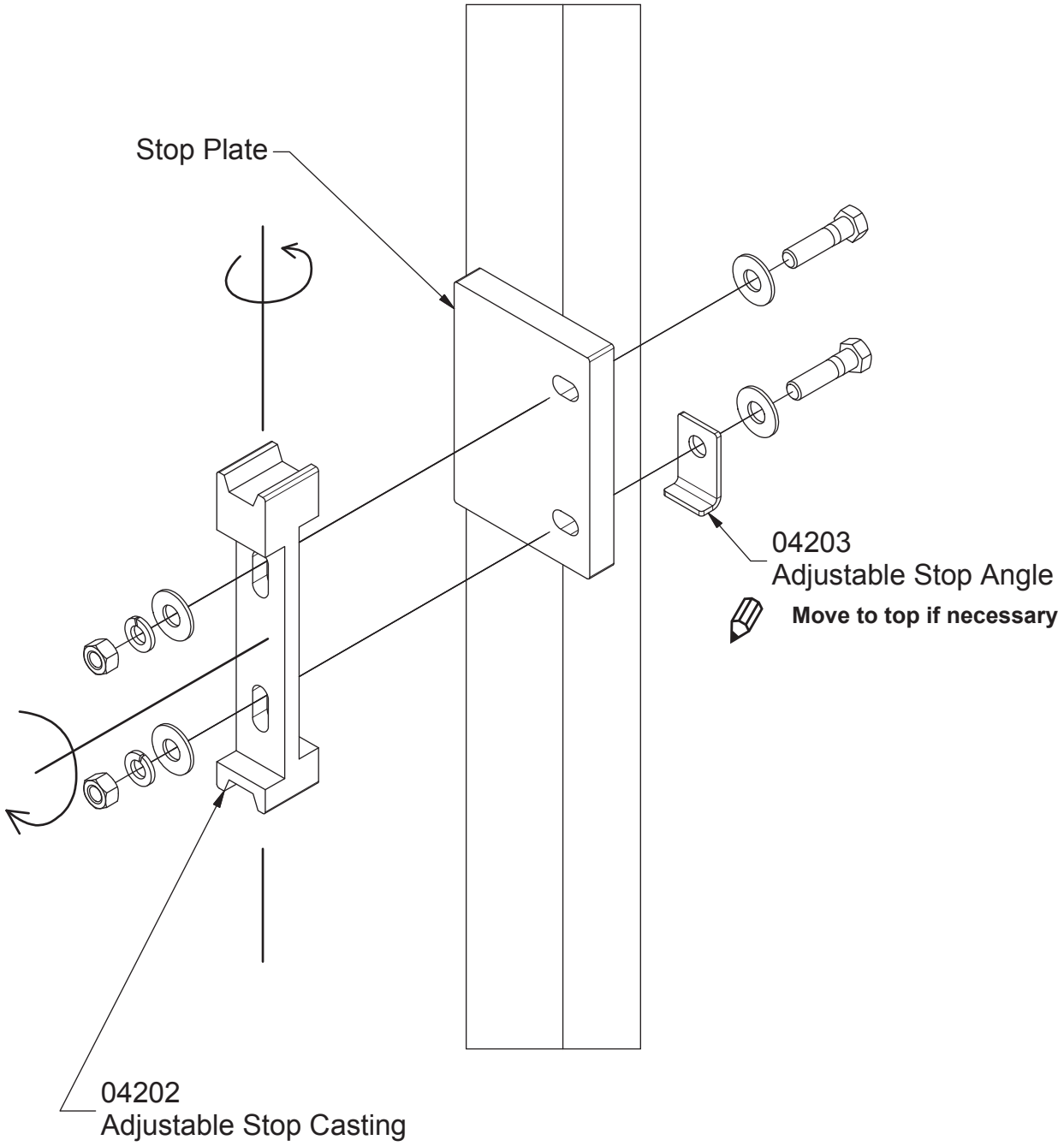

## 32.4. SIDE TO SIDE PLAY

770147-21

Guide shoes have angled slots.

Adjust the gap between Guide Shoe and rail to 1/16” [1.58 mm] each side.

Allow Maximum panel movement between guides 1/8” [3.175 mm].

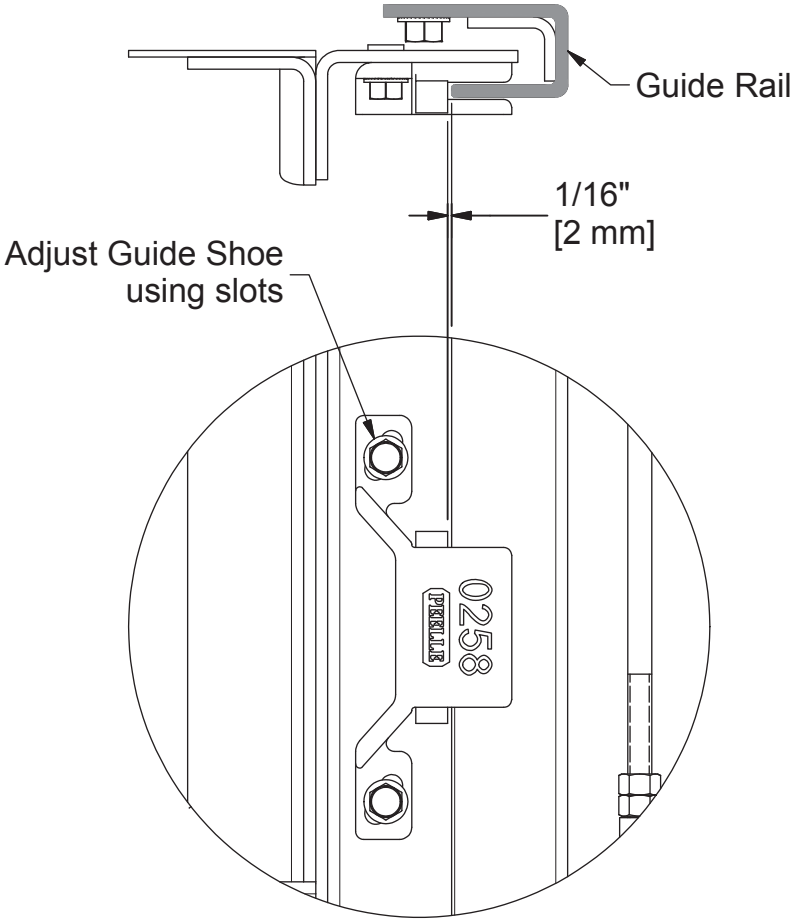

## 32.5. ADJUST THE TAMPER RESISTANT PLUGGING DEVICE

The tamper resistant plugging device is made up of two components, the plugging rod and the plugging trigger.

The plugging rod is cut to the proper length for the door from the factory. It must be installed before the lock is pinned into its vertical fixed position.

Thread the plugging rod into the plugging trigger until it bottoms out. The plugging trigger can be found on the door rail below the opening. Loosen and slide the interlock so that the plugging rod inserts into the hole. Slide the interlock into place and turn the rod for proper adjustment. Lock the rod in place with the supplied nuts.

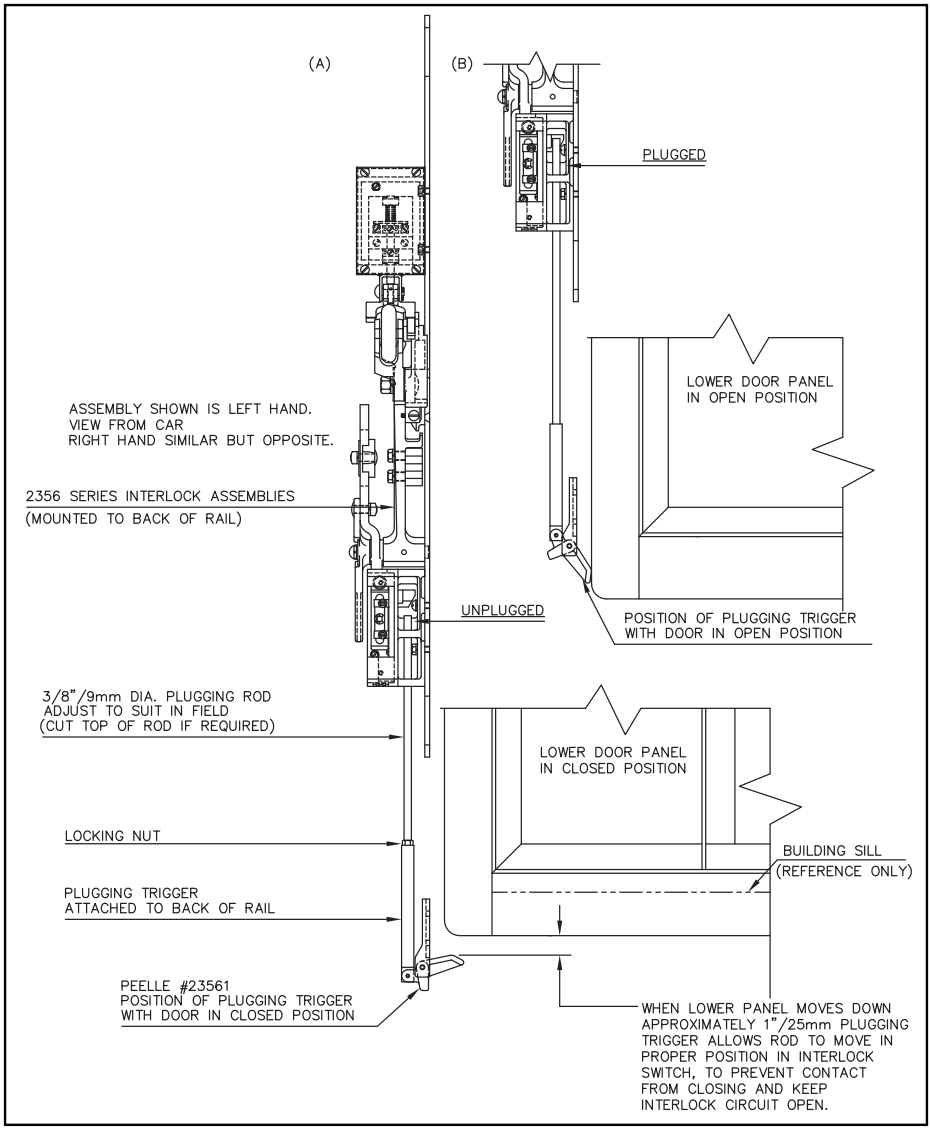


***Figure 3 -*** *Plugging Trigger*

## 32.6. INSTALL KEEPER HOOK, UPPER PANEL HOOK AND SET POSITION OF THE INTERLOCK

The keeper hook for the interlock must be bolted to the hanger bar on the lower panel. This lower panel lock keeper hook and the upper panel lock keeper, prevent the door panels from being opened when the interlock roller is extended (locked).

Set the interlock ratchet 8mm [5/16in] below the lower keeper hook with the doors closed, chains adjusted and side-tension-latches working; set the 8mm [5/16in] dimension by moving the interlock plate up or down in the slots, then securely tightening the bolts.

Ensure the keeper hook has at least 8mm [5/16in] locking engagement with the top of the ratchet. ***(see pg 45, 32.6)***. Ensure keeper hook clears the ratchet teeth while opening the door. Use shims to space the hook in or out to obtain clearance if necessary.

Add pinning bolts ***(see pg 46, Figure 5)*** drill 8mm [5/16in] holes (through the holes supplied in the rail) into the interlock plate, near the middle. Then tap interlock plate M10 or 3/8 UNC. Insert 20mm or 3/4in long roundhead bolts ***(see pg 46, Figure 5)***. The interlock vertical position should never change. From this point on only the panel position can be adjusted.

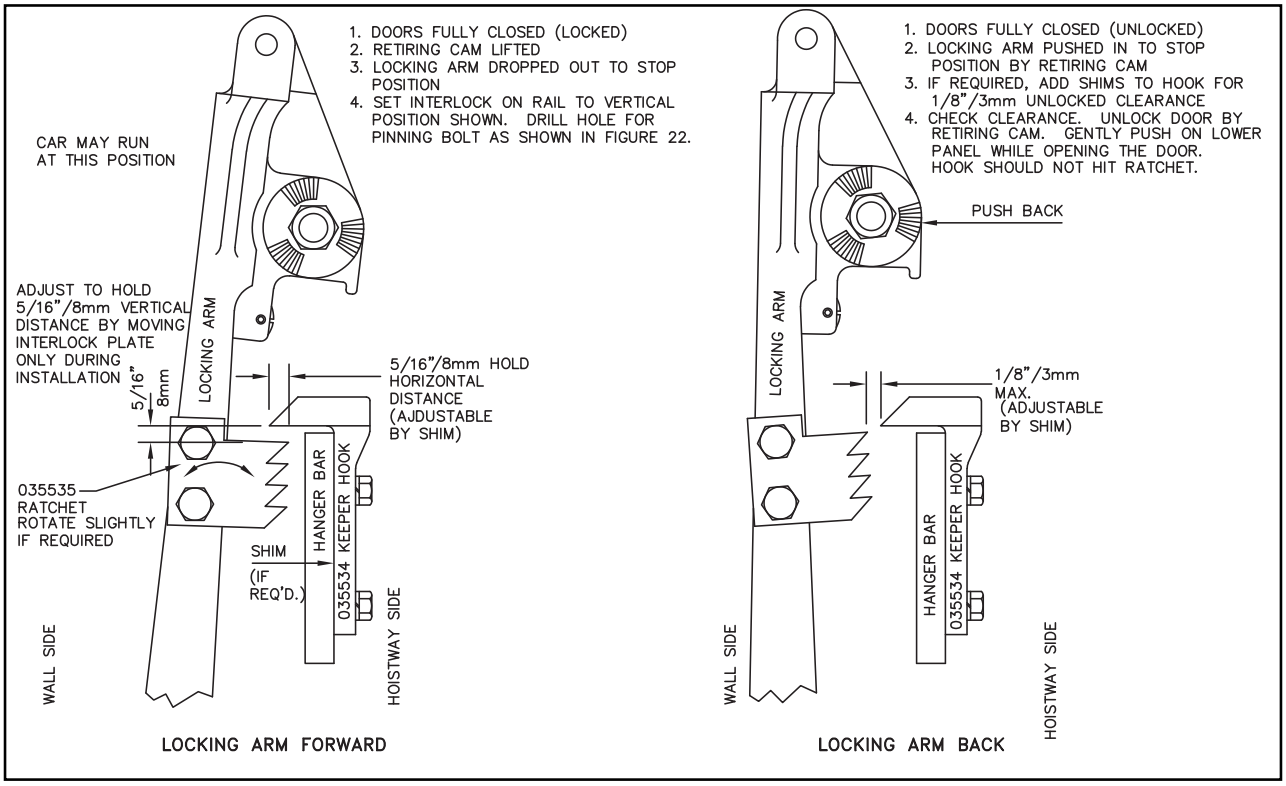


***Figure 4 -*** *Locking Arm*

## 32.7. PIN THE INTERLOCK

1) Drill through existing 3/8” [10mm] rail holes.
2) Bolt and pin interlock in place.
3) Interlock will not be adjusted again in live of product. Only the panels will be adjusted.

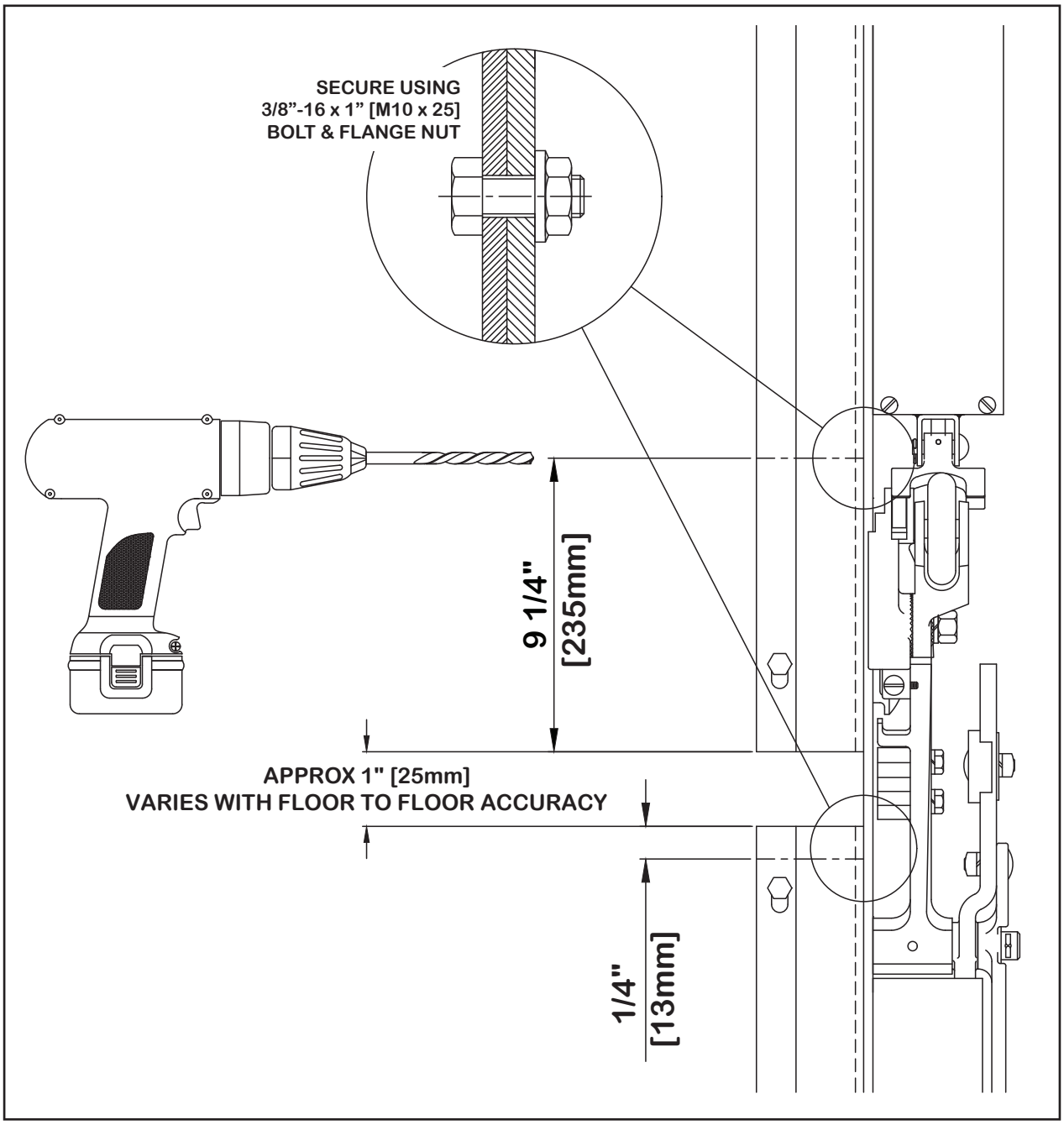


***Figure 5 -*** *Pining the Lock*

## 32.8. ADJUST THE DOOR CLOSE CAM AND KICK-OUT ARM

Set the door closed cam to open the DC contact when the door panels are more than 20mm [3/4 in] apart. A handy guide for the DC contact setting is to put the hook in the “first” notch see ***(see pg 45, Figure 4) step 1***. The DC contact should be slightly open. At this setting, the contact should be definitely made (closed) when the doors are closed. Check that the contact is still made when the door is pushed toward the hoistway shaft from the room side approximately 3mm [1/8 in]. The cam should have 2mm [1/16 in] horizontal free movement away from the hanger bar when the doors are closed ***(see pg 45, Figure 4) step 2*** for normal door closed position see ***(see pg 45, Figure 4) step 3***.

Adjust kick-out arm separately to positively open DC contact when the door panels move more than 20mm [3/4 in] apart ***(see pg 45, Figure 4) step 4,*** the DC contact should never make when the door keeper hook is in an unlocked position. The DC contact is to be held mechanically open by the tamper resistant plugging device. Replace the DC contact cover on the contact box as soon as possible to make sure the insulating paper does not get torn.

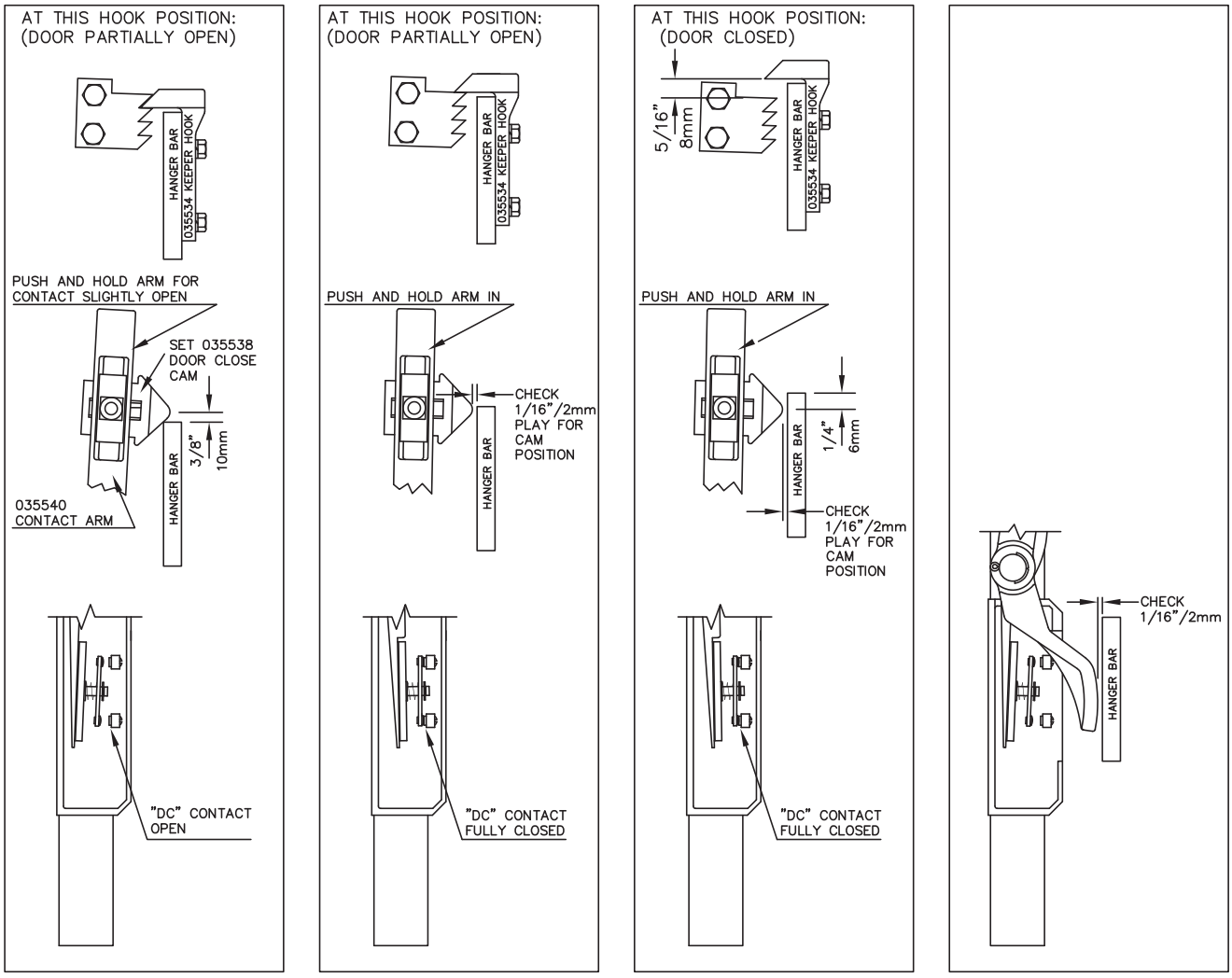


*Step 1* *Step 2* *Step 3* *Step 4*

***Figure 6 -*** *DC Cam Settings*

## 32.9. SET THE ROLLER ARM

The roller arm of the interlock is normally attached in the factory. Make sure locking arm spring is in place and working.

Ensure locking arm falls forward, easily and fully and rests on the mechanical stop ***(see pg 47, Figure 6).*** Stop block (located on the contact shaft, in the upper interlock box) should just touch the bottom fixed guide block, when the locking arm is fully dropped ***(see pg 48, Figure 8).***

Contact shaft should drop enough to allow the locking arm to fall forwards fully and rest on the mechanical stop. Adjust the stop block and / or raise the upper interlock box to hold the factory 60mm [2-1/2 in] dimension.

Stand on landing side and make sure the door panels cannot be shaken open when they are closed and locked (retiring cam held up or elevator away). Try again while you are pushing the lower panel toward the elevator (retiring cam held up or elevator away).

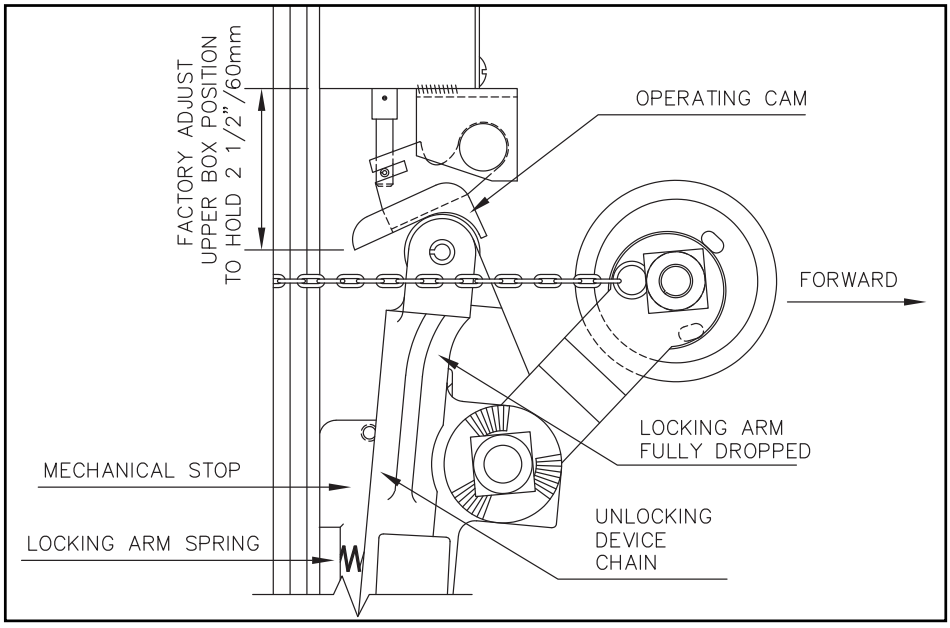


***Figure 7 -*** *Roller Arm Setting*

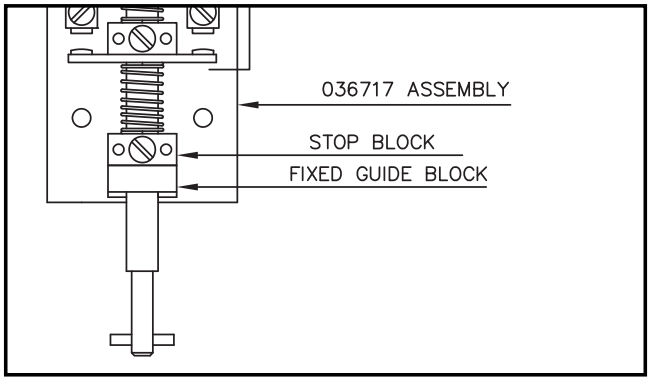


***Figure 8 -*** *Contact Switch Assembly*

## 32.10. ADJUST THE TAMPER RESISTANT PLUGGING DEVICE

The trigger portion of the device is actuated by the opening movement of the lower door panel, the trigger then pushes the rod into the DC contact (lower box). The rod movement keeps the DC contact open which prevents the DC contact from being closed until the lower panel is returned to the closed position. The rod should be set to lock the contact arm immediately after the contact arm moves to the full open position. The rod should hold “Door Closed” DC contact open as soon as the contact opens.

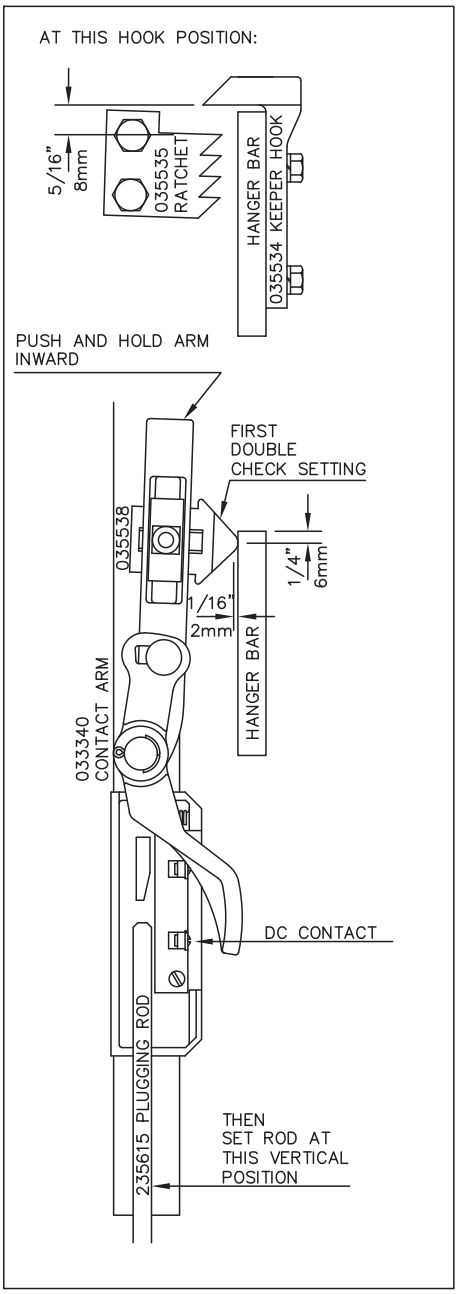


***Figure 9 -*** *Plug Rod Setting Closed*

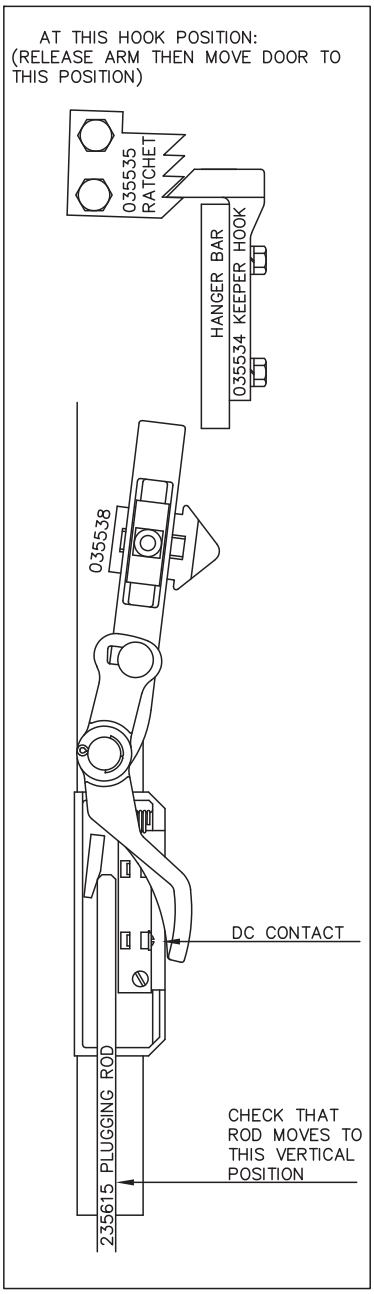


***Figure 10 -*** *Plug Rod Setting Open*


**THE PEELLE COMPANY**

FREIGHT DOORS | CAR GATES | CAR ENCLOSURES

**TECHNICAL SUPPORT** 1-800-787-5020 ext 275


# Guide No. 262-EN

## SLIDE DOWN DOOR INSTALLATION GUIDE

Date: April 08 / 2019