GUIDE 252

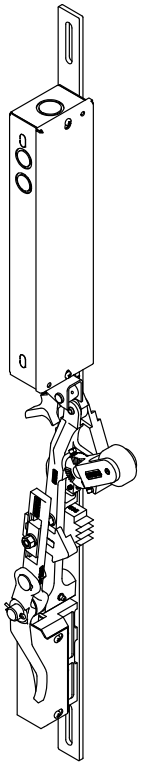

INTERLOCK INSTALLATION & SETTINGS GUIDE

PEELLE®

THE PEELLE COMPANY

FREIGHT DOORS | CAR GATES | CAR ENCLOSURES

TECHNICAL SUPPORT 1-800-787-5020 ext 275

Guide No. 252

INTERLOCK INSTALLATION & SETTINGS GUIDE

Date: Sept 20 / 2017

Contents

1. DOOR INTERLOCK DEFINITION

The Peelle UB type interlock and retiring cam prevent opening a hoistway landing door from the landing side, unless the elevator is within 250mm [10in] of the landing for ASME A17.1 compliance and 175mm [7in] for EN81 compliance within the unlocking zone, the elevator shall be stopped or in the process of stopping or re-leveling

The interlock is an electromechanical device also designed to prevent operation of an elevator unless the hoistway landing doors are locked (mechanically) in the closed position.

An individual interlock is required for each freight elevator hoistway landing door. Bi-parting freight door interlocks differ in installation and appearance from those used on passenger elevator doors

2. ELEVATOR DOOR AND CAR GATE INTERLOCK CIRCUITS

There are two electrical contacts within each Peelle UB type hoistway landing door interlock:

1) The DC "door closed" contact closes when the door is closed. This DC contact, when completing the series connection of all door and car gate closed contacts, signals the elevator controller to allow retiring cam to pick up.

Note: The "door closed" series circuit also includes a car gate contact that closes when the car gate is closed.

2) The DI "door lock" contact closes when the interlock locking arm extends to lock the closed door (as a result of the retiring cam pick up). This DI contact, when completing a series connection of all "door lock" DI contacts plus the "door close" DC contacts, signals an allowable elevator 'run' condition.

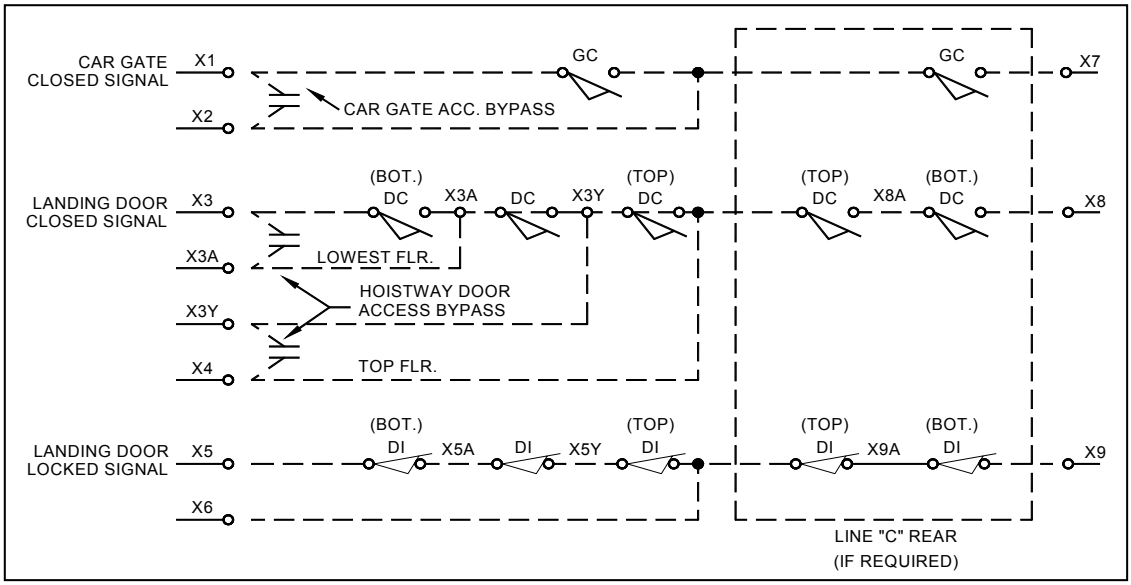

Figure 1 - *Interlock circuit wiring. The shown safety circuit wiring is for reference only. See the elevator prints for proper interlock wiring.*

3. ELEVATOR CONTROL OPERATION

All “Hoistway Door Closed” (DC) and “Car Gate Closed” (GC) contacts be connected in series and that the contacts be made when the doors and gates are closed.

All “Hoistway Door Lock” (DI) contacts be connected in series and that the contacts be made when all doors are locked.

When the elevator controller is signaled, “all doors closed”, the elevator controller may initiate retiring cam operation (see Retiring Cam Initiation Contact). Initiation will cause the retiring cam face to retire (lift). When the interlock roller is no longer depressed by retiring cam, hoistway door locking action takes place and the elevator controller is signaled, “all doors locked”. The elevator controller shall not allow the elevator car to run unless all DC (hoistway door closed) and GC (gate closed) and DI (hoistway door locking) contacts are made.

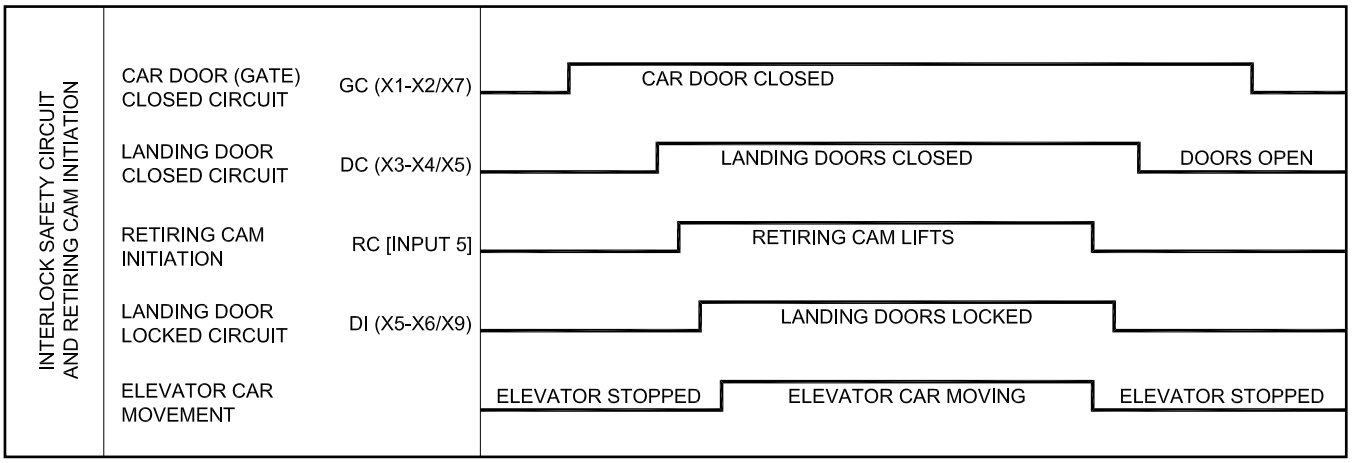

Figure 2 - *Interlock and Elevator Operation*

4. DOOR INTERLOCK INSTALLATION

Make sure that the interlock (and retiring cam) are mounted on the same side (LH or RH) of the door as shown on the door layout drawings (Peelle L-1). The left hands (left hand, right hand) of biparting door hardware (including interlock) are viewed from inside the elevator car looking out. The interlock is bolted to the door rails on the on side of the opening see ***(Figure 4)***.

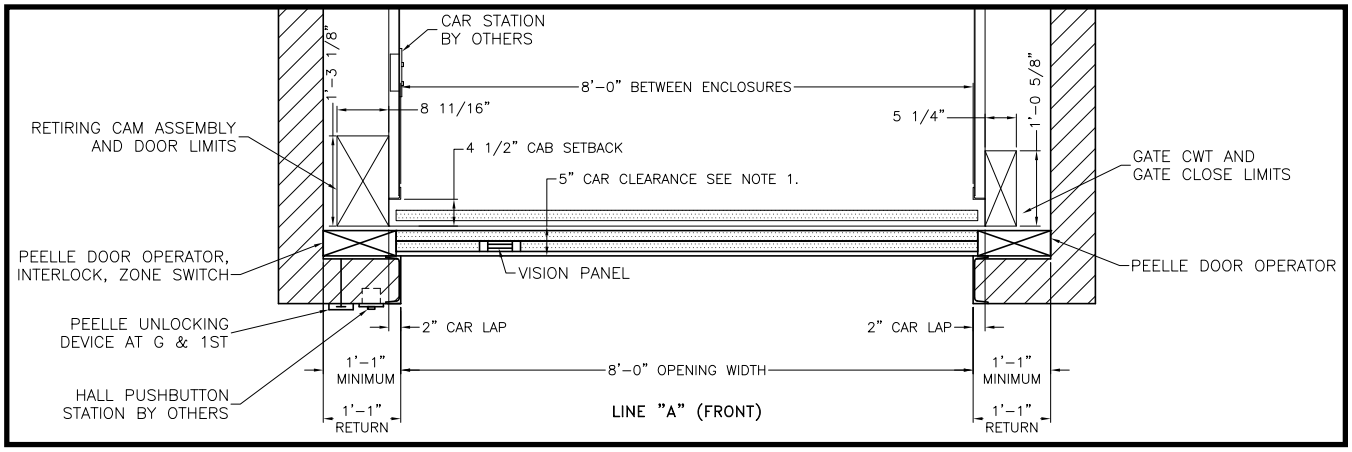

Figure 3 - *Layout Drawing*

4.1. INSTALL THE INTERLOCK

Install the interlock using the upper and lower bolts but leave the bolts loose for vertical adjustment later. The interlock has slotted mounting holes so that it can be adjusted 50mm [2in] vertically and set to the proper height.

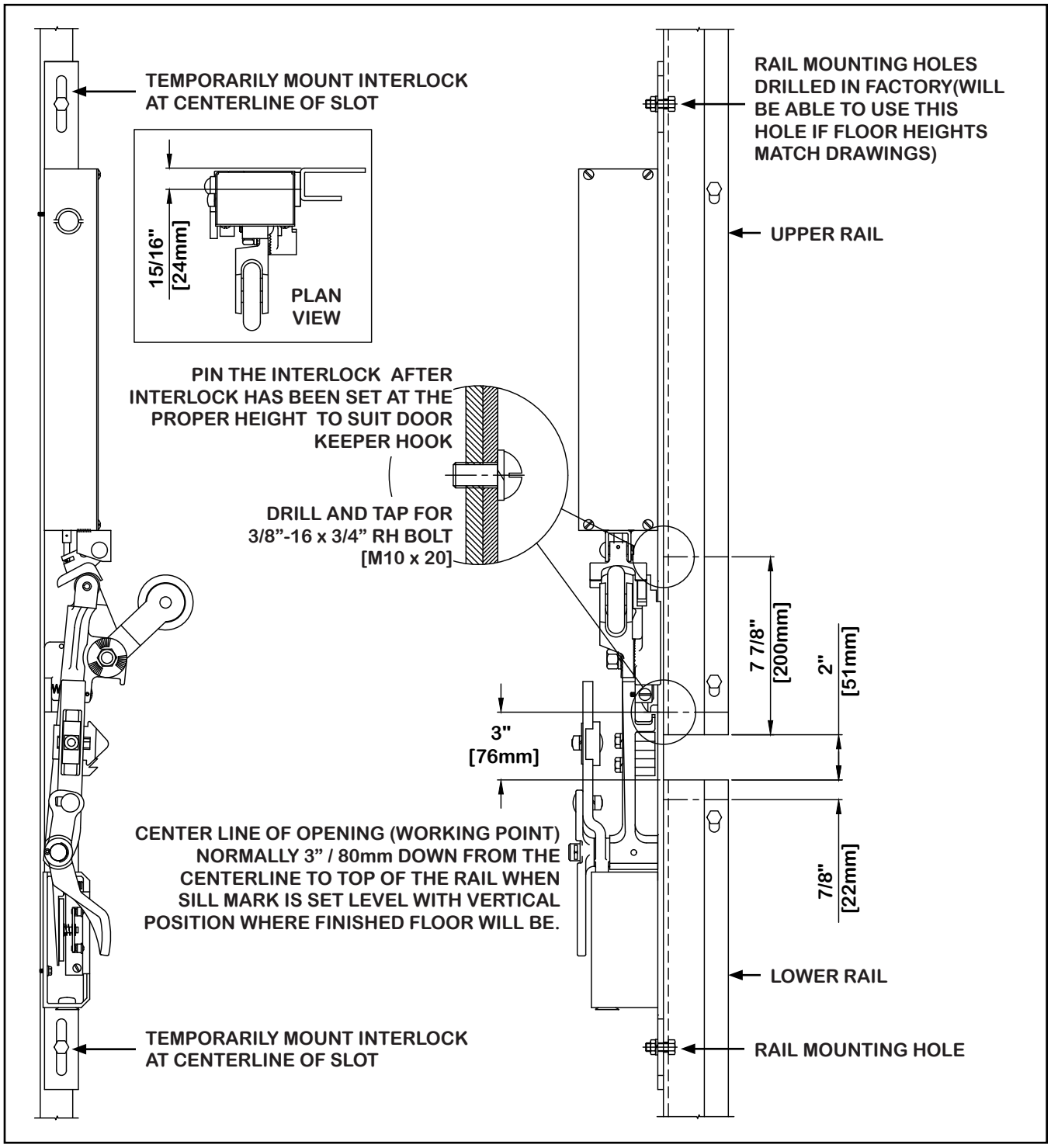

Figure 4 - *Interlock Mounting*

4.2. INSTALL THE TAMPER RESISTANT PLUGGING DEVICE

The tamper resistant plugging device is made up of two components, the plugging rod and the plugging trigger.

The plugging rod is cut to the proper length for the door from the factory. It must be installed before the lock is pinned into its vertical fixed position.

Thread the plugging rod into the plugging trigger until it bottoms out. The plugging trigger can be found on the door rail below the opening. Loosen and slide the interlock so that the plugging rod inserts into the hole. Slide the interlock into place and turn the rod for proper adjustment. Lock the rod in place with the supplied nuts.

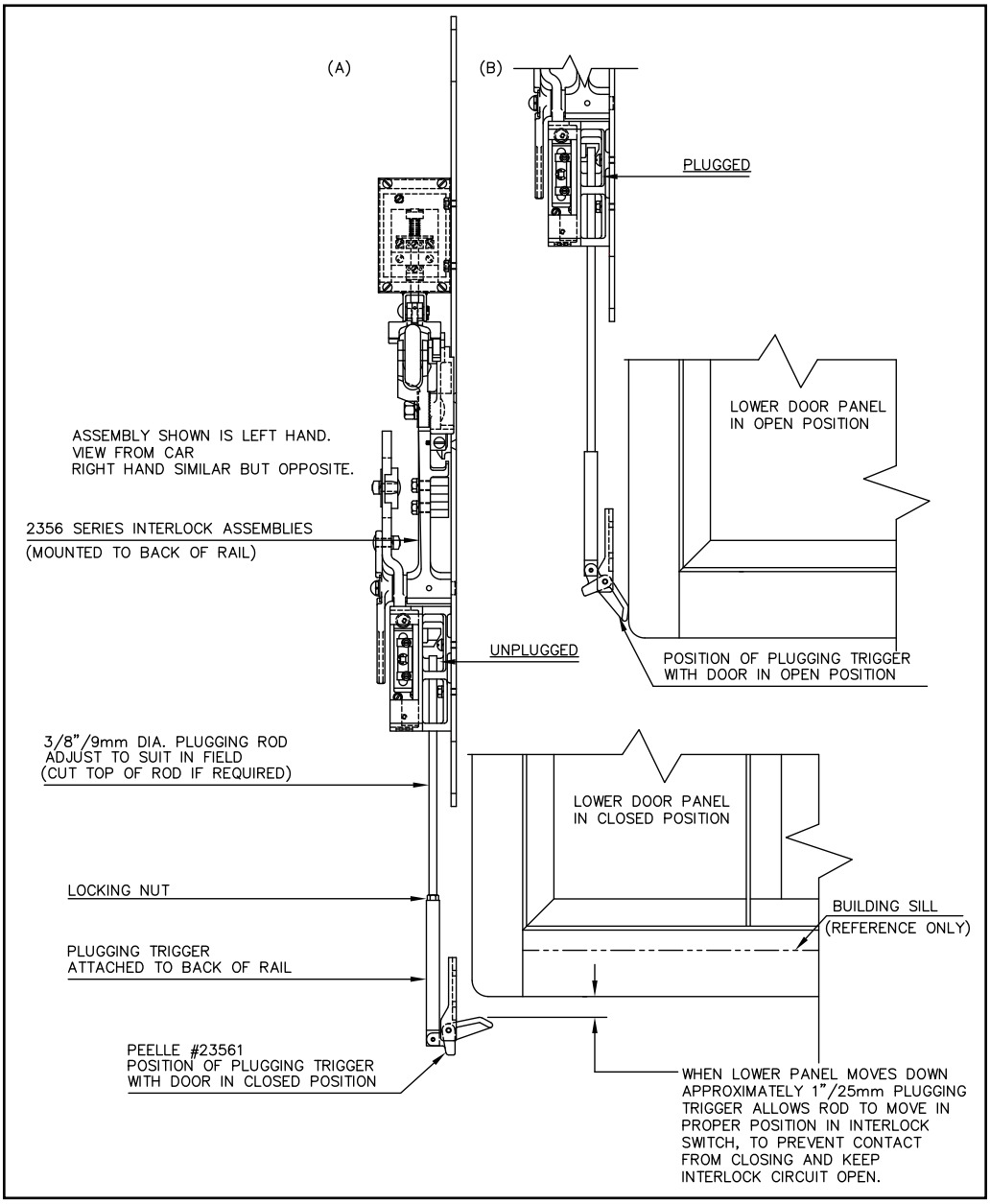

Figure 5 - *Plugging Trigger*

4.3. INSTALL THE KEEPER HOOK, UPPER PANEL HOOK AND SET THE POSITION OF THE INTERLOCK

The keeper hook for the interlock must be bolted to the hanger bar on the lower panel. This lower panel lock keeper hook and the upper panel lock keeper, prevent the door panels from being opened when the interlock roller is extended (locked).

Set the interlock ratchet 8mm [5/16in] below the lower keeper hook with the doors closed, chains adjusted and side-tension-latches working; set the 8mm [5/16in] dimension by moving the interlock plate up or down in the slots, then securely tightening the bolts.

Ensure the keeper hook has at least 8mm [5/16in] locking engagement with the top of the ratchet. See ***(Figure 6)***. Ensure keeper hook clears the ratchet teeth while opening the door. Use shims to space the hook in or out to obtain clearance if necessary.

Attach/adjust upper panel keeper hook to side-tension-latch on interlock side as shown in ***(Figure 6)*** There is one style keeper for regular doors (066975) and another for pass-type doors (066976). If door has side-opposite-lock (mechanical lock for wide doors) on the side opposite the interlock, attach/adjust an upper panel lock keeper also on that side, in addition to a lower panel keeper hook.

Add pinning bolts according to ***(Figure 4)*** Drill 8mm [5/16in] holes (through the holes supplied in the rail) into the interlock plate, near the middle. Then tap interlock plate M10 or 3/8 UNC. Insert 20mm or 3/4in long roundhead bolts. See ***(Figure 4)*** The interlock vertical position should never change.

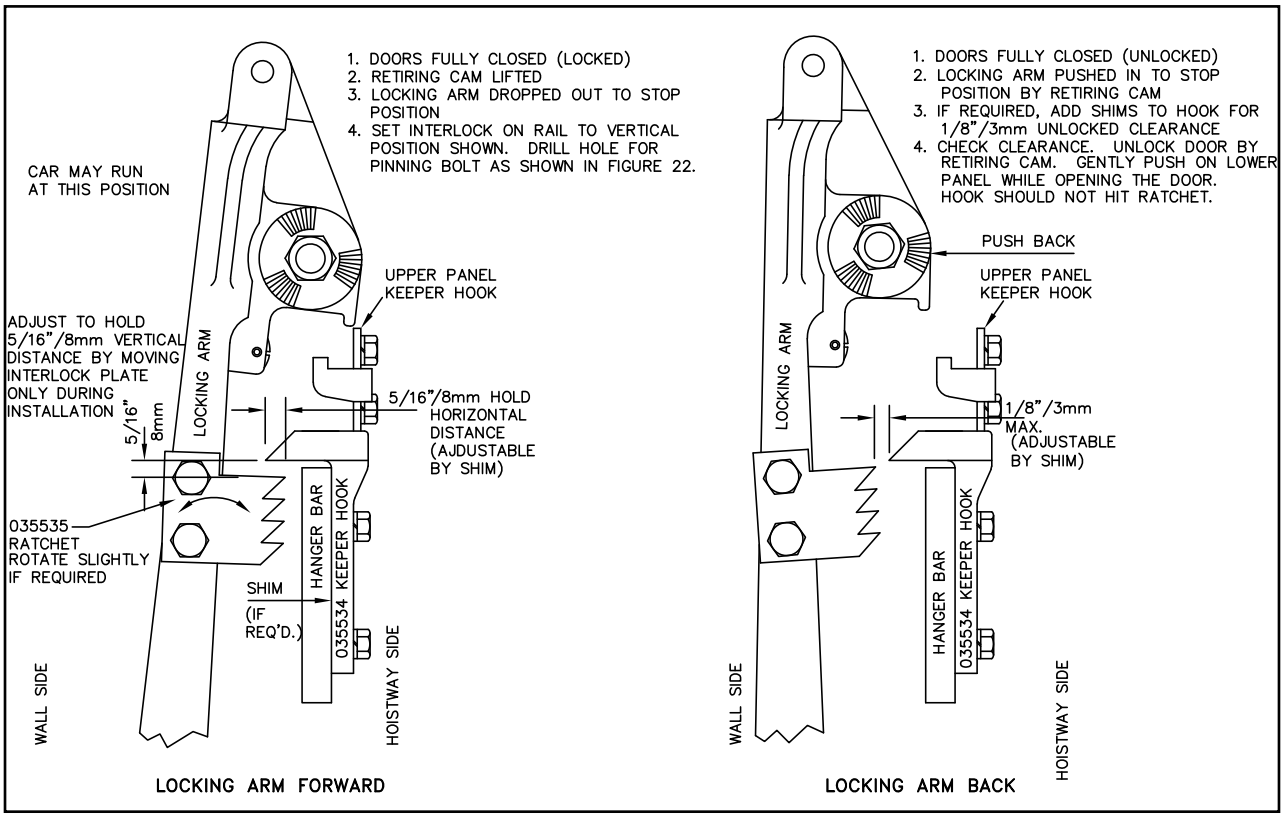

Figure 6 - *Locking Arm*

4.4. ADJUST THE DOOR CLOSE CAM AND KICK-OUT ARM

Set the door closed cam to open the DC contact when the door panels are more than 20mm [3/4 in] apart. A handy guide for the DC contact setting is to put the hook in the "first" notch see ***(Figure 7) step 1***. The DC contact should be slightly open. At this setting, the contact should be definitely made (closed) when the doors are closed. Check that the contact is still made when the door is pushed toward the hoistway shaft from the room side approximately 3mm [1/8 in]. The cam should have 2mm [1/16 in] horizontal free movement away from the hanger bar when the doors are closed. See ***(Figure 7) step 2*** for normal door closed position see ***(Figure 7) step 3***.

Adjust kick-out arm separately to positively open DC contact when the door panels move more than 20mm [3/4 in] apart, See ***(Figure 7) step 4,*** the DC contact should never make when the door keeper hook is in an unlocked position. The DC contact is to be held mechanically open by the tamper resistant plugging device. Replace the DC contact cover on the contact box as soon as possible to make sure the insulating paper does not get torn.

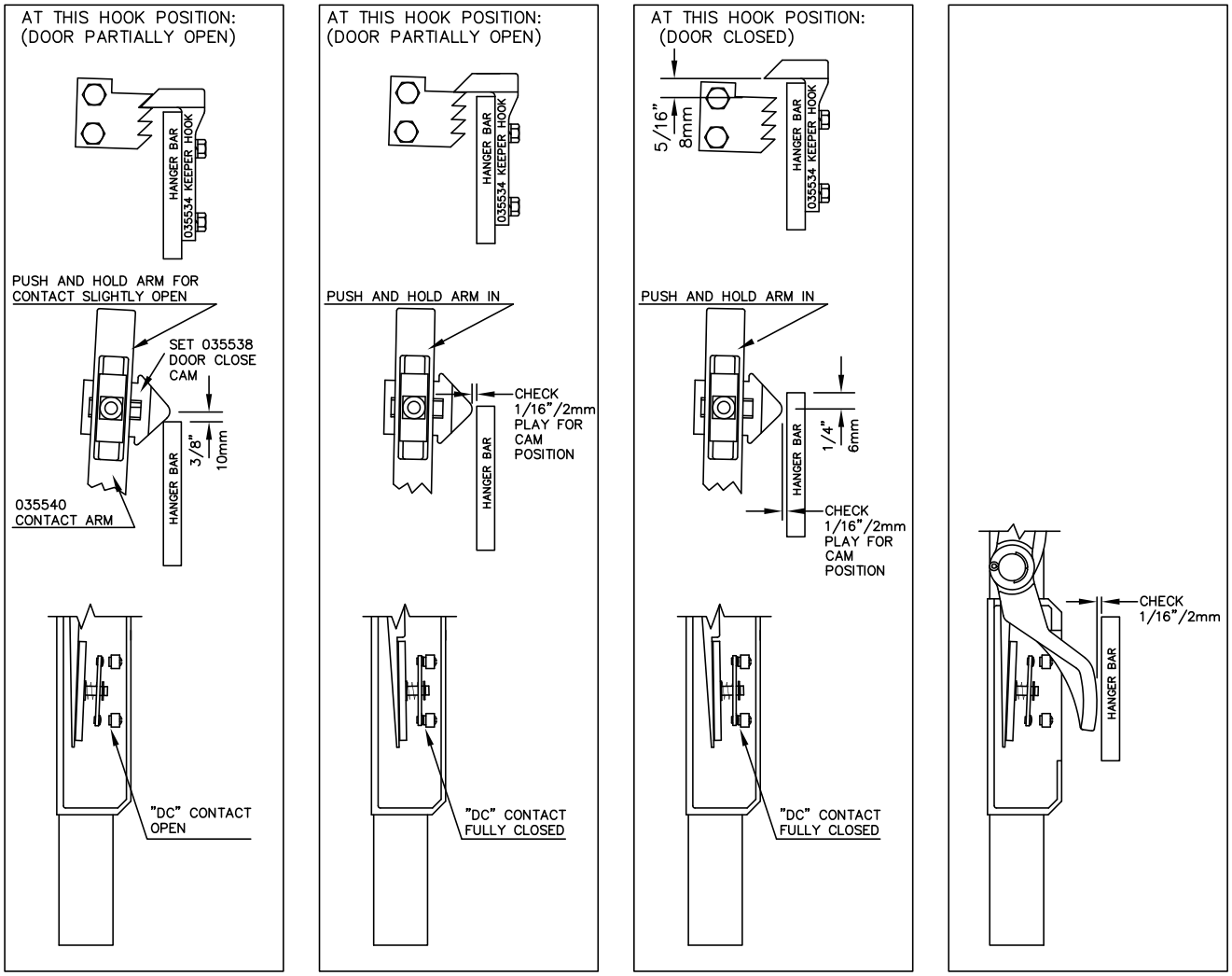

Step 1 *Step 2* *Step 3* *Step 4*

Figure 7 - *DC Cam Settings*

4.5. CHECK THE DOOR LOCK CONTACT AND ZONE SWITCH

Check roller arm adjustment for full 22mm [7/8in] locking arm throw by retiring cam action. Push in the roller fully by hand as if to unlock the door. The DI contact should open approx. 10mm [3/8 in] release the roller. The DI contact should close and the black plastic block should be 3mm [1/8 in] below the contact bar. Reset the block to hold the dimension if necessary, see ***(Figure 8)***. The 60mm [2-1/2 in] dimension in ***(Figure 10)*** must be held. If the doors are less than 20mm [3/4 in] apart, DC contact will be closed. If DI is also closed, the elevator may run.

Note: for power doors, if the interlock contains a zone contact assembly, the DI contact is the only normally closed contact and is typically located at the end of the zone switch assembly. ***(Figure 8) & (Figure 9).***

For Peelle Wireless door controller installations, the zone contact switch assembly is located at the top of the door lock DI contact. The zone switch is a micro switch type of contact and is operated by the vertical movement of the contact shaft in the box. Set the normally open contact of this switch to close at the same time as the other normally closed DI contact opens. ***(Figure 9)***

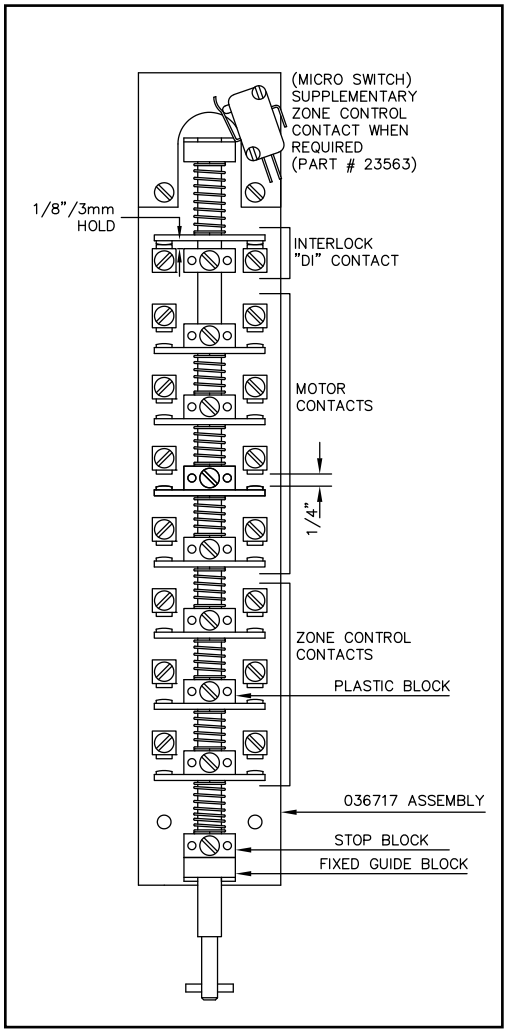

Figure 8 - *Motorized Zone Contact Switch Assembly. Used for installations with PLC Controllers.*

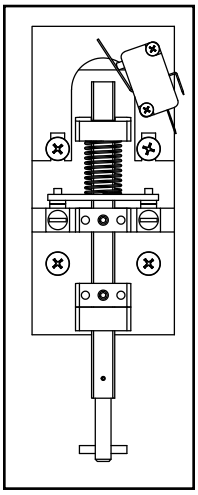

Figure 9 - *Manual Zone Contact Switch Assembly. Used for manual installations or Wireless Door Controllers.*

4.6. SET THE ROLLER ARM

The roller arm of the interlock is normally attached in the factory. Make sure locking arm spring is in place and working.

Ensure locking arm falls forward, easily and fully and rests on the mechanical stop. See ***(Figure 10)***

Stop block (located on the contact shaft, in the upper interlock box) should just touch the bottom fixed guide block, when the locking arm is fully dropped. See ***(Figure 8).***

Contact shaft should drop enough to allow the locking arm to fall forwards fully and rest on the mechanical stop. Adjust the stop block and / or raise the upper interlock box to hold the factory 60mm [2-1/2 in] dimension.

Stand on landing side and make sure the door panels cannot be shaken open when they are closed and locked (retiring cam held up or elevator away). Try again while you are pushing the lower panel toward the elevator (retiring cam held up or elevator away).

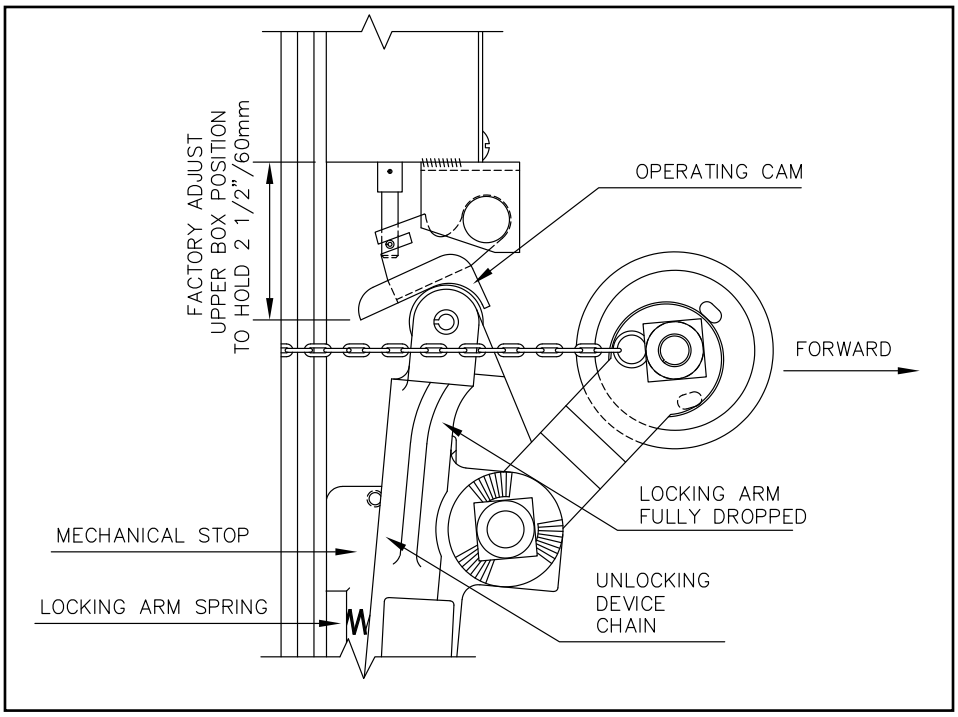

Figure 10 - *Roller Arm Setting*

4.7. ADJUST THE TAMPER RESISTANT PLUGGING DEVICE

The trigger portion of the device is actuated by the opening movement of the lower door panel, the trigger then pushes the rod into the DC contact (lower box). The rod movement keeps the DC contact open which prevents the DC contact from being closed until the lower panel is returned to the closed position. The rod should be set to lock the contact arm immediately after the contact arm moves to the full open position. The rod should hold “Door Closed” DC contact open as soon as the contact opens.

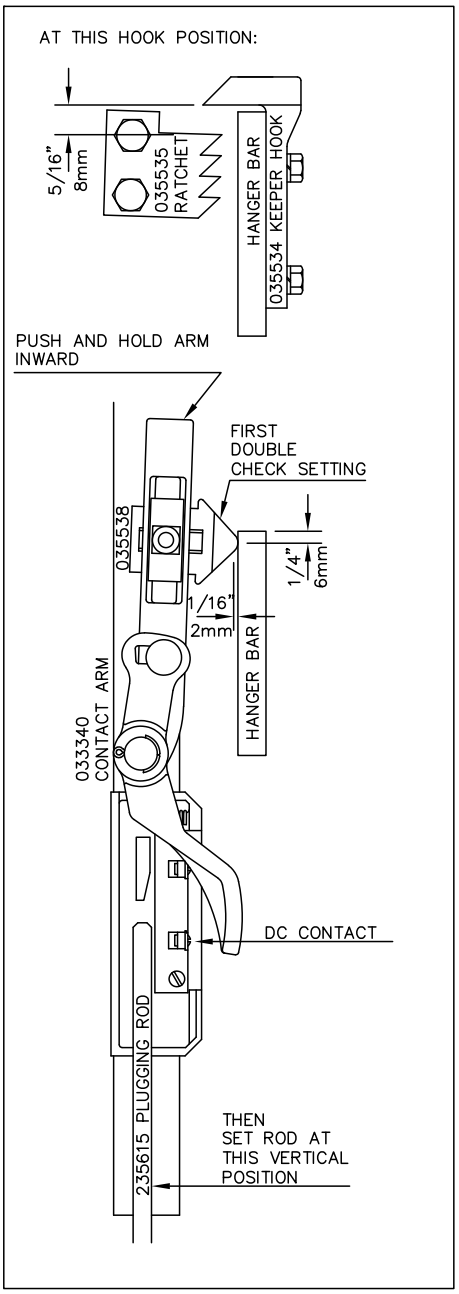

Figure 12 - *Plug Rod Setting Closed*

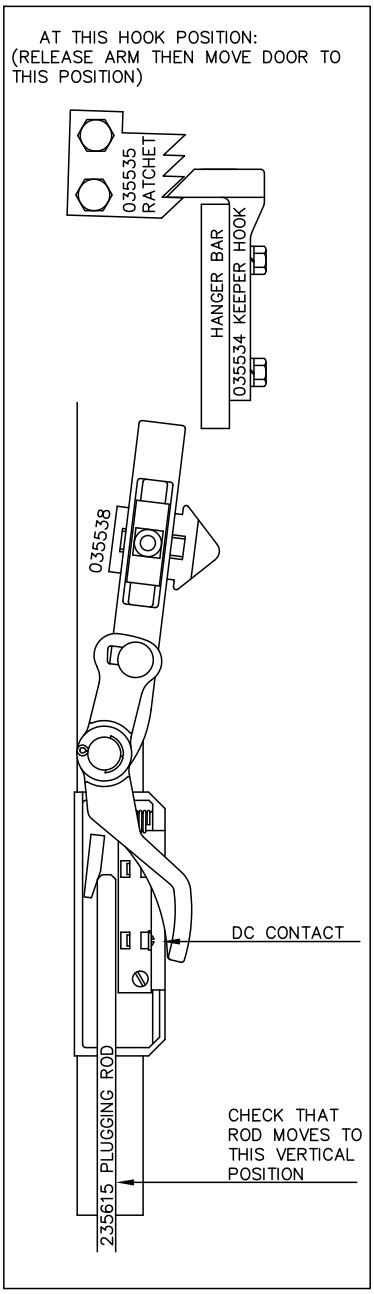

Figure 11 - *Plug Rod Setting Open*

5. POWER DOOR ZONE CONTACT ASSEMBLY SETTING (PLC DOOR CONTROLLER)

Door zone 'Z' contacts, where provided, with PLC door controllers, are mounted in the door lock DI box and electrically connect the controller to the motors for the landing door where the elevator has stopped. The Z contacts are not part of the elevator safety circuit see ***(Figure 8).***

With the roller arm extended out, all zone contacts should be 6mm [1/4 in] open. See ***(Figure 10)*** Reset all zone contact plastic blocks to this dimension if necessary. Push in the roller by hand to maximum travel and check that all zone contacts make simultaneously and the black plastic blocks allow 6mm [1/4 in] over-travel.

For installations with a staggered rear line of doors allowing a single line controller, zone contact assemblies have an additional contact switch assembly at the top of the zone contacts. For this type of installation, a single line controller is used for both front and rear door lines. The additional switch is a micro switch type of contact and is operated by the vertical movement of the contact shaft in the box. Set the normally open contact of this switch to make at the same time as the other normally open zone contacts are made.

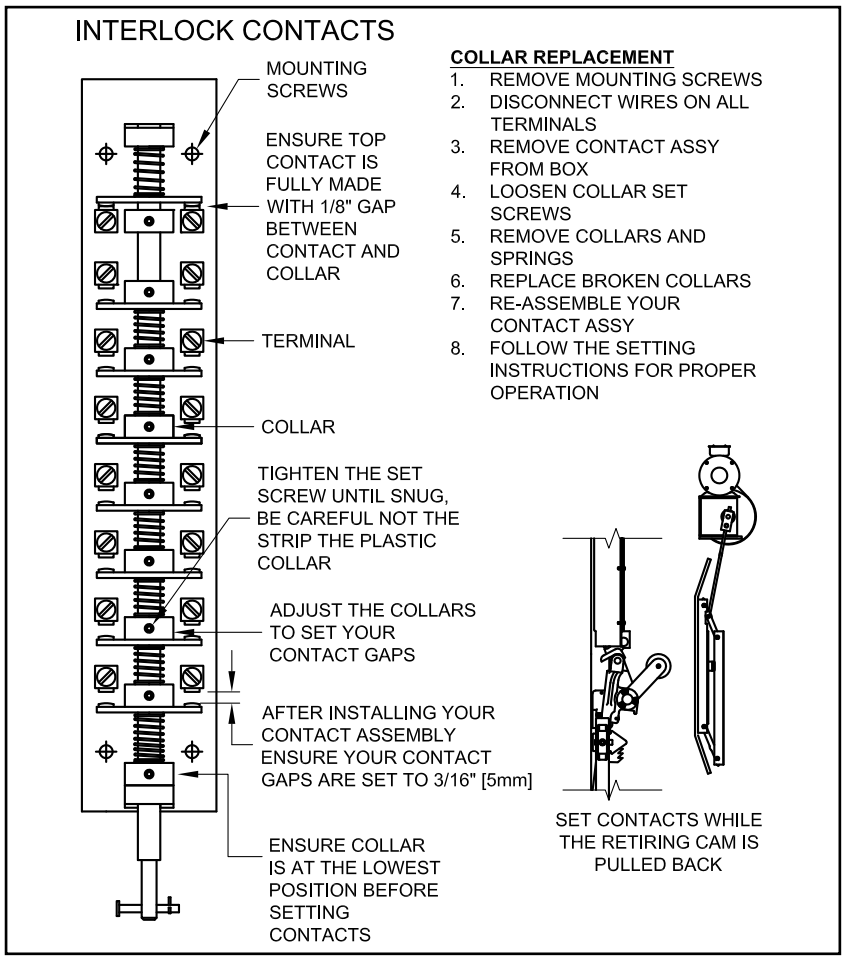

Figure 13 - *Interlock Contact Settings*

6. EMERGENCY UNLOCKING DEVICES

Door Emergency Unlocking Devices are provided for each landing except jurisdictions which restrict their use. Check local code and Peelle layout Drawing L-1. The unlocking device is used to unlock a hoistway landing door for access to the hoistway shaft by authorized personnel. It is mounted on the wall next to the door. It is operated by a key that unlocks a box and exposes a chain. The chain is pulled to unlock the door. See ***(Figure 14).***

To install the unlocking device, a hole must be drilled through the building wall for the chain. Use an electric hammer drill. Make sure the hole is drilled so that the unlocking device pull chain will meet the interlock roller. Attach the chain to the interlock roller arm with a 1/2 in nut see ***(Figure 14).*** When the device cover is locked in closed position, there should be enough slack in the chain to let the locking arm rest in its locked position.

For power doors, a switch inside the unlocking device prevents power door operation when the door unlocking device is unlocked. Make sure power for door operation is not available after the key that unlocks the device is turned and the chain is pulled. Manual re-activation of door operation is required. If power is available at this time, check the electrical connection of the wires to the unlocking device and the door zone contacts.

The door unlocking device is not to be confused with an access switch, as elevator operation must be completely unavailable when the door unlocking device is in use. Unlocking devices are used instead of access switches when certain requirements are met.

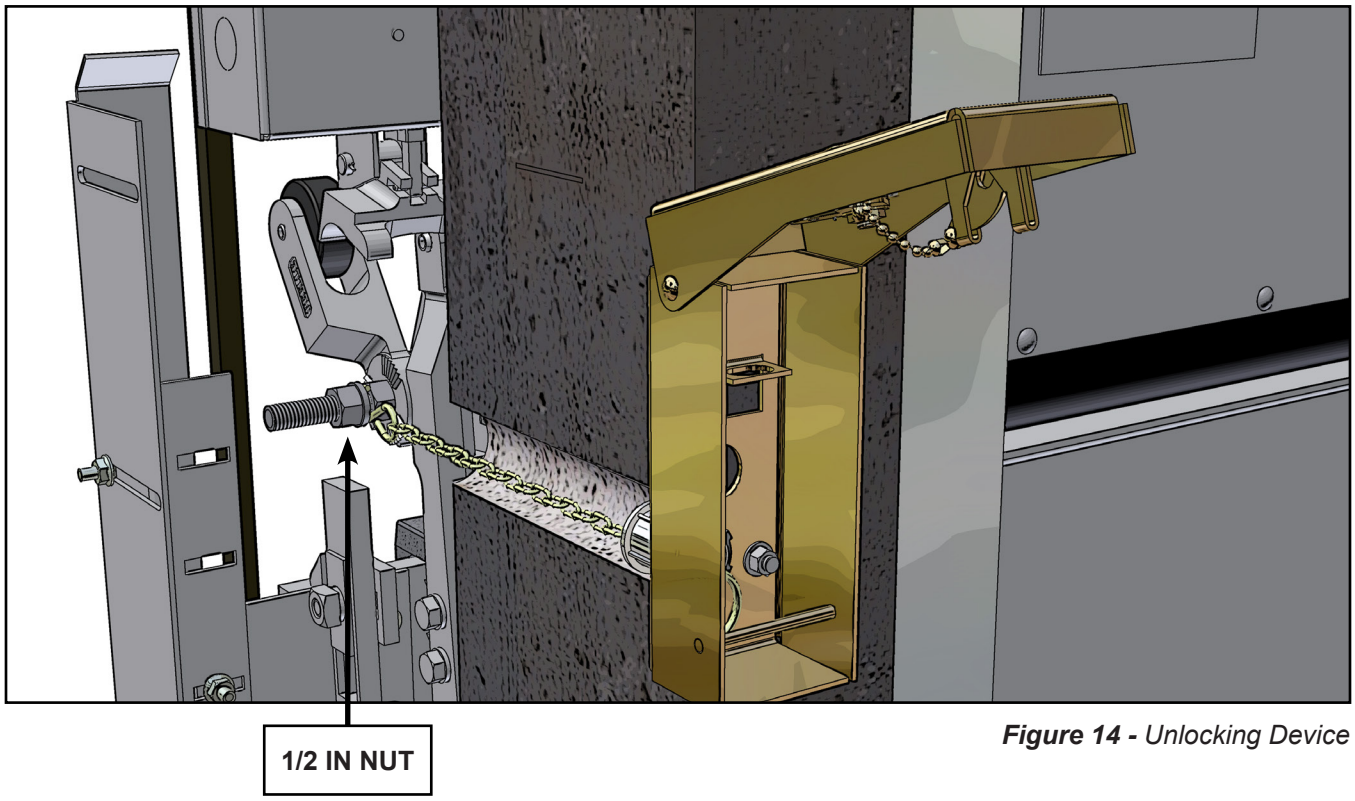

Figure 14 - *Unlocking Device*

7. SPECIAL CONSIDERATION FOR SLIDE-UP TYPE DOORS

Slide-up to open doors require that the interlock be mounted inverted from bi-parting doors. The installation adjustment and settings for inverted interlocks applies to interlocks not inverted. See ***(Figure 15) & (Figure 16)*** for an overview of the interlock setting for slide-up style of doors.

For inverted interlocks used on slide-up type doors, the plug rod is factory installed with a compensating spring which is meant to overcome the gravitational weight of the rod. If necessary, adjust the rod spring to full compress when the door is in the open position.

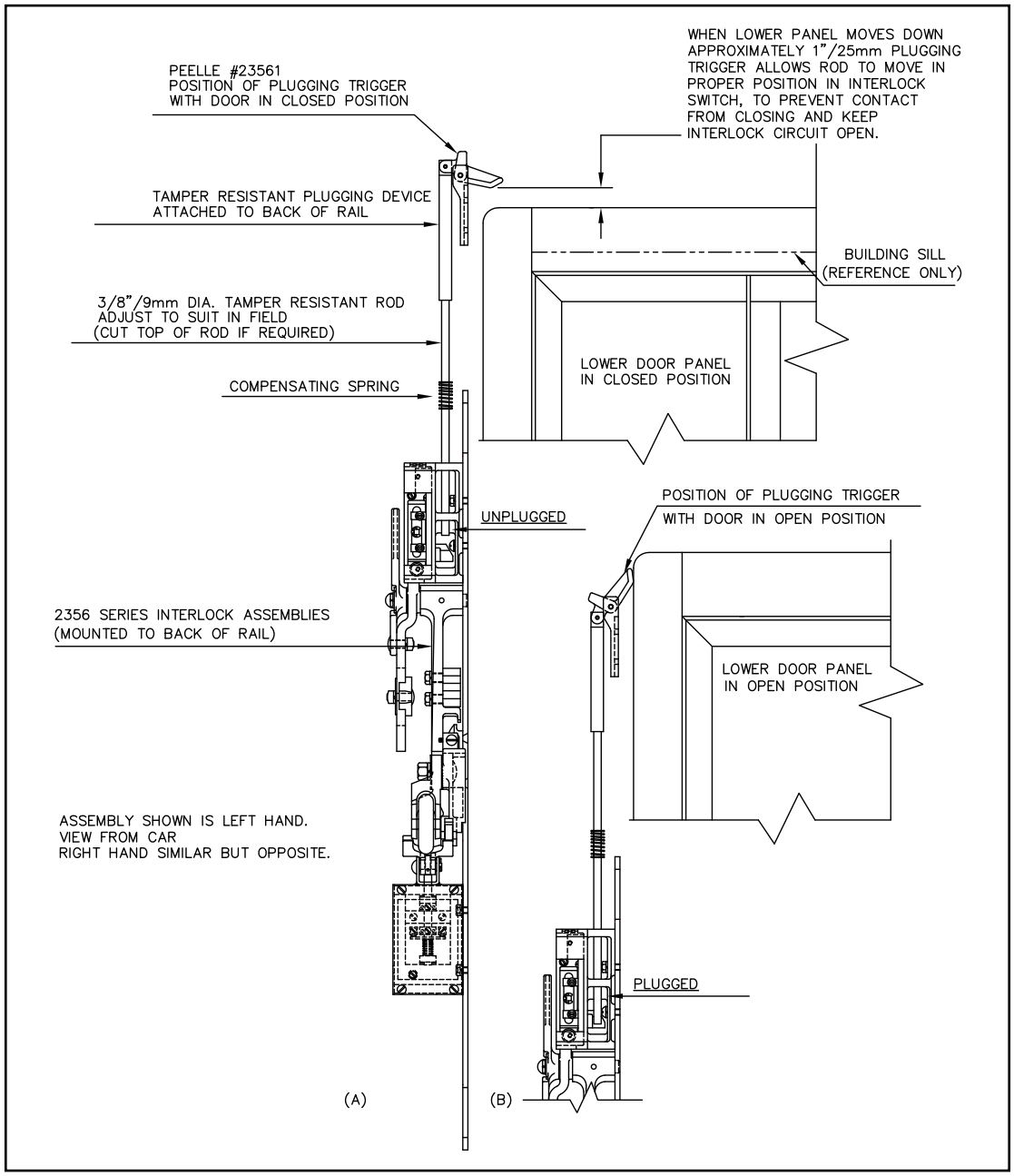

Figure 15 - *Inverted Plug Rod*

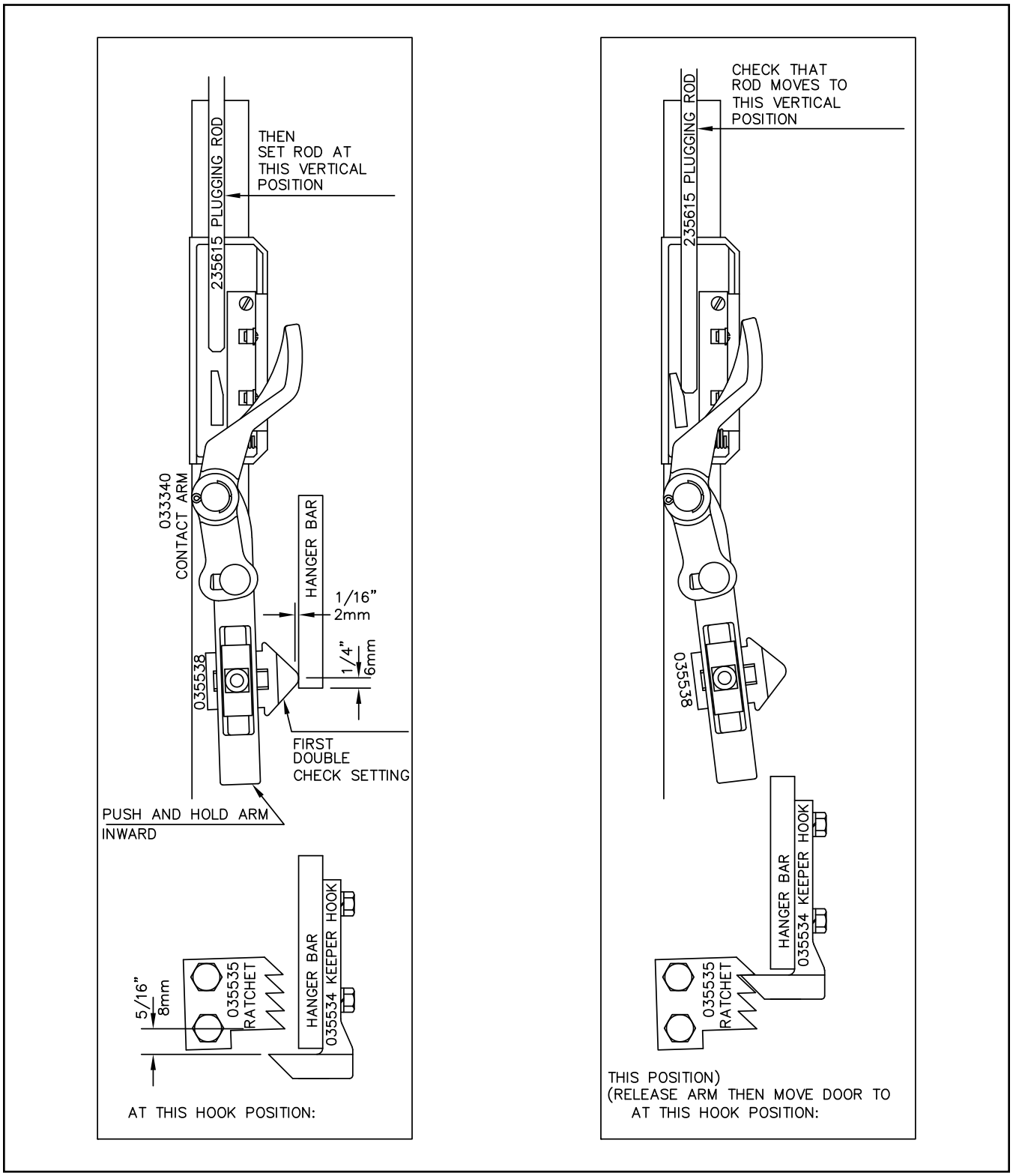

Figure 16 - *Inverted Locking*

8. SPECIAL CONSIDERATION FOR INTERLOCKS FOR USE IN MOISTURE ENVIRONMENTS AND HAZARDOUS LOCATIONS

In order to maintain the integrity rating of the interlock electrical enclosures, proper conduit, fittings and wiring methods must be used. Follow the local code requirements and the manufacturers recommendation for all fittings and conduit connections.

The entry points for Peelle interlocks for use in moisture conditions are not designed to protect the wires from abrasions. Approved fittings are either supplied or must be provided to protect wires from abrasion.

In wet locations or locations where walls are frequently washed or where there are surfaces of absorbent materials, the entire wiring system including boxes, fittings, conduit and cables must be supported such that there is at least 6mm [1/4 inch] air space between it and the supporting surface.

Local electrical codes require that the conduit and raceways be metallically joined together into a continuous electric conductor and must be mechanically connected to all boxes, fittings and cabinets as to provide effective electrical continuity for grounding.

For interlocks used in hazardous locations, all conduit must be rigid metal or intermediate metal conduit. All entries into the interlock are factory drilled and tapped with fitting and conduit engagement of at least 5 full threads. Sealing fittings filled with approved compound is required on all explosion-proof enclosures. Seals are necessary to limit volume and block gases and vapors from a hazardous area to a non-hazardous area.

9. DOOR INTERLOCK PRECAUTIONS FOR SAFETY

Make sure the door is closed and locked before you move to the next door. Lock the door. If there is no unlocking device, leave off the interlock "hook" and set up a locked barricade.

At the time of installation final adjustments, completely recheck all the interlock mechanical adjustments for possible chain stretch. The settings described above allow for some chain stretch over a 10-15 year period. As a safety measure, the Peelle interlock will usually not allow the elevator car to operate after the chains have stretched that allows 10mm [3/8 in] lowering of closed position of door panels. After that, the "Door Closed" contact should break and the car should not operate.

Remember, interlock contacts are wired in series; any one contact malfunction will break the circuit.

Before turning over the elevator and after all construction dust has settled perform the following.

1) Turn off the power and clean all contacts with contact cleaner or rubbing alcohol
2) Any concrete or drywall dust should be removed
3) Do not file the contacts.
4) With power off, test the circuits with a continuity tester that has enough battery power to go through the complete circuit.

10. DECLARATION OF CONFORMITY

PEELLE

EC DECLARATION OF CONFORMITY FOR SAFETY COMPONENTS

1. We, The Peelle Company Limited, 195 Sandalwood Parkway West, Brampton, Ontario L7A 1J6, CANADA

2. Declare that the Safety Component described below

Part Number	Description	Serial Number
2356-67	Interlock NEMA 1/IP10	Job Specific
2356-59	Interlock NEMA 1/IP10	Job Specific
2332-29	Interlock NEMA 4X/IP54/56	Job Specific
2344-29	Interlock NEMA 4X/IP56 SS	Job Specific
2332-32	Interlock NEMA 4X/IP54/56	Job Specific
2344-32	Interlock NEMA 4X/IP56 SS	Job Specific
23526	Interlock NEMA 7/9	Job Specific
2352-53	Interlock NEMA 7/9	Job Specific

3. Which performs the following Safety Function
   Lift (Elevator) Landing Door Locking Device

4. Complies with the relevant provisions of
   European Parliament and Council (Lifts) Directive (2014/33/EU)
   and EN 81 Safety rules for the construction and installation of lifts

5. Has obtained an EC Type-Examination Certificate
   Certificate No. NL 98-400-1002-008-01
   from Liftinstituut B.V., The Netherlands

6. Has undergone Production Checks by a Notified Body
   No. 0400 Liftinstituut B.V., Buikslotermeerplein 381, 1020 MA Amsterdam, The Netherlands

7. Name: Frank Leo, P.Eng. Engineering Manager

8. Date: 5 September 2017

Product Landing Door Locking Device
Part No. 2356-67R / 2356-67L

PEELLE®

August 1/2017

Description
UB1A Interlock & Zone Switch

Intended for use with, manual or power operated vertically sliding freight elevator doors with retiring cams and an elevator door control system.

Actuation

Min Force required:	7 lbs / 31 N
Movement Required for actuation:	1 1/8 in / 30 mm
Voltage Rating:	220V AC/DC 2A
Level of protection:	-
Weight:	-

CERTIFICATIONS

Certificate No. 70119255

Certificate No. 20150723-SA260

Certificate No. NL 98-400-1002-008-01

PA Certificate No. 1039
MEA No. 133-79-E

STANDARDS

UL 1203
CSA B44-M90
EN81-1, EN81-2

ORDERING INFORMATION

2356-67R (RIGHT HAND)
2356-67L (LEFT HAND)

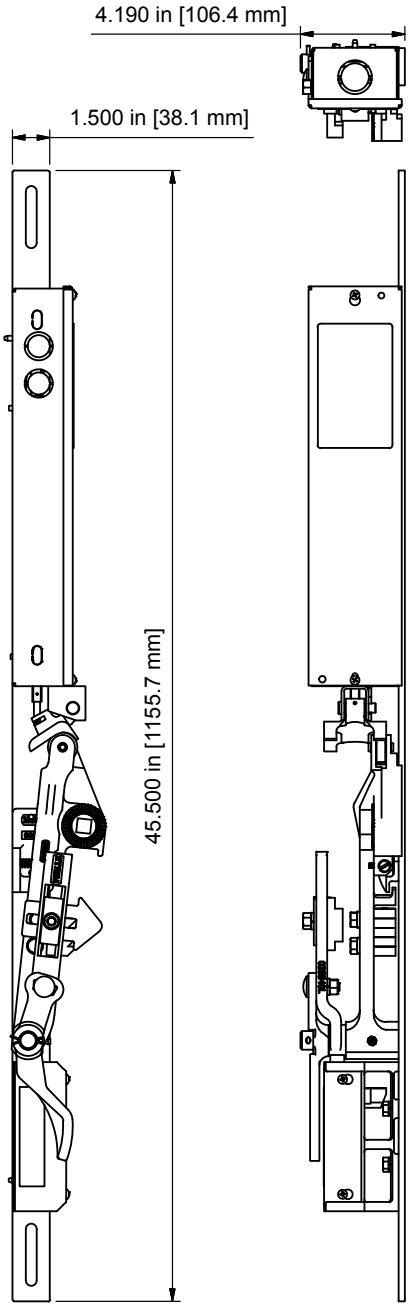

Left Hand Shown

195 Sandalwood Parkway W. Brampton ON L7A 1J6 ● +1 (905) 846 4545 ● Toll Free: 1 (800) 787 5020 ● Fax: 1 (846) 2161 ● ***PeelleDoor.com***

Product Landing Door Locking Device
Part No. 2356-59R / 2356-59L

August 1/2017

Description
UB1A Interlock & Zone Switch

Intended for use with, manual or power operated vertically sliding freight elevator doors with retiring cams and an elevator door control system.

Actuation
Min Force required: 7 lbs / 31 N

Movement Required for actuation: 1 1/8 in / 30 mm

Voltage Rating: 220V AC/DC 2A

Level of protection: -

Weight: -

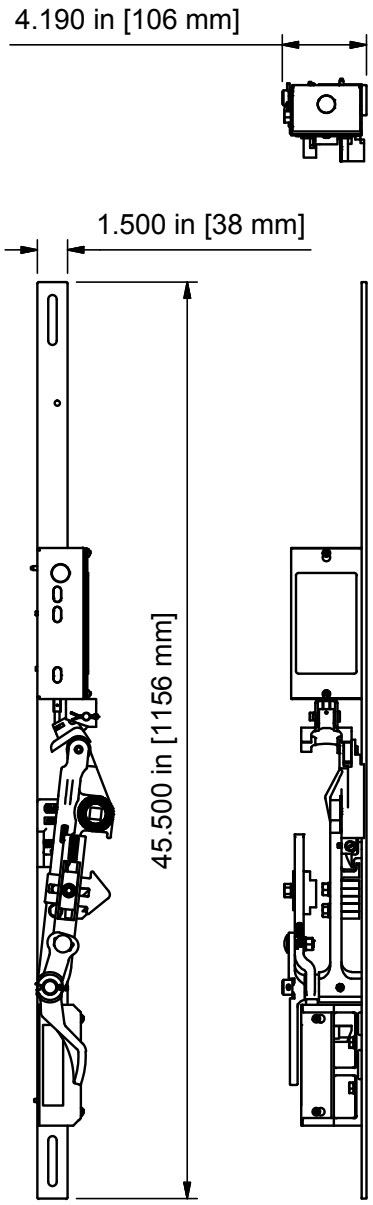

CERTIFICATIONS

Certificate No. 70119255

Certificate No. 20150723-SA260

Certificate No. NL 98-400-1002-008-01

PA Certificate No. 1039
MEA No. 133-79-E

STANDARDS

UL 1203
CSA B44-M90
EN81-1, EN81-2

ORDERING INFORMATION

2356-59R (RIGHT HAND)
2356-59L (LEFT HAND)

Left Hand Shown

195 Sandalwood Parkway W. Brampton ON L7A 1J6 ● +1 (905) 846 4545 ● Toll Free: 1 (800) 787 5020 ● Fax: 1 (846) 2161 ● ***PeelleDoor.com***

Product Landing Door Locking Device For Use In Wet Locations

Part No. 2332-29R / 2332-29L

August 1/2017

Description
UB1A Interlock & Zone Switch

Intended for use with, manual or power operated vertically sliding freight elevator doors with retiring cams and an elevator door control system.

Actuation

Min Force required:	7 lbs / 31 N
Movement Required for actuation:	1 1/8 in / 30 mm
Voltage Rating:	220V AC/DC 2A
Level of protection:	NEMA 4X IP66 Equivalent
Weight:	21.60 lbs / 9.79 Kg
Temperature Range:	-20°C to 40°C

CERTIFICATIONS

Certificate No. 1001129

Certificate No. 20150723-SA260

LISTED
475X

Certificate No. NL 98-400-1002-008-01

400

PA Certificate No. 1039
MEA No. 133-79-E

STANDARDS

ASME A17.1/CSA B44
EN81-1, EN81-2

ORDERING INFORMATION

2332-29R (RIGHT HAND)
2332-29L (LEFT HAND)

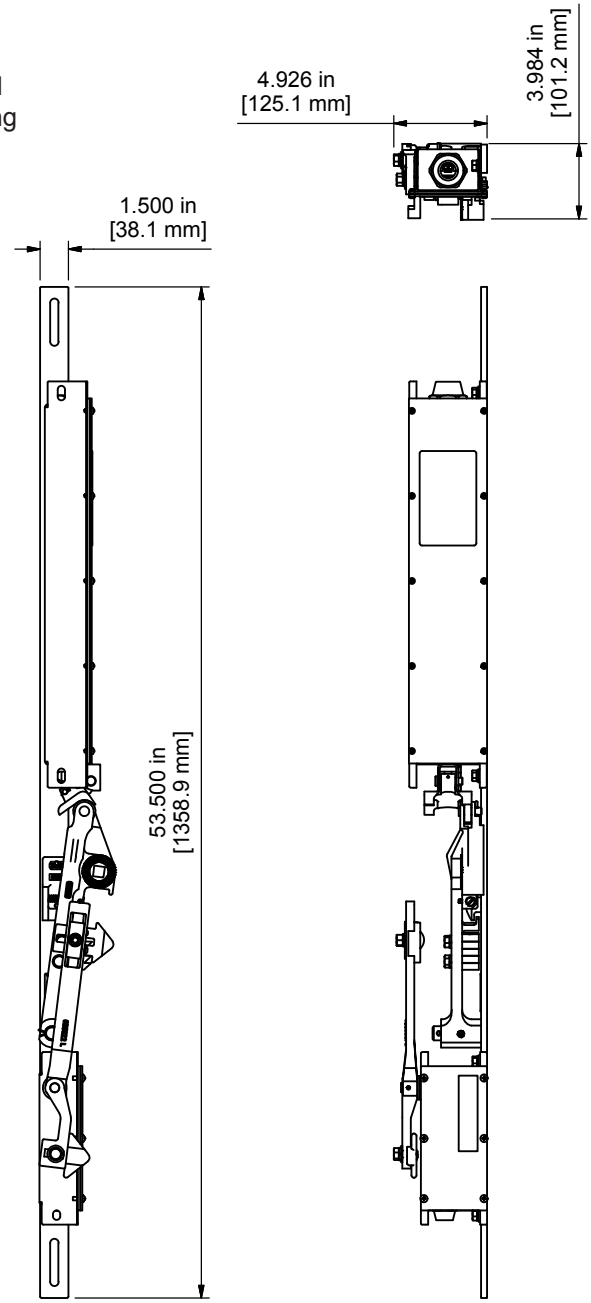

Left Hand Shown

Product Landing Door Locking Device For Use In Wet Locations

Part No. 2332-32R / 2332-32L

August 1/2017

Description
UB1A Interlock & Zone Switch

Intended for use with, manual or power operated vertically sliding freight elevator doors with retiring cams and an elevator door control system.

Actuation

Min Force required:	7 lbs / 31 N
Movement Required for actuation:	1 1/8 in / 30 mm
Voltage Rating:	220V AC/DC 2A
Level of protection:	NEMA 4X IP66 Equivalent
Weight:	-
Temperature Range:	-20°C to 40°C

CERTIFICATIONS

Certificate No.
LR 11780-48

Certificate No.
20150723-SA260

Certificate No.
NL 98-400-1002-008-01

PA Certificate No. 1039
MEA No. 133-79-E

STANDARDS

ASME A17.1/CSA B44
EN81-1, EN81-2

ORDERING INFORMATION

2332-32R (RIGHT HAND)
2332-32L (LEFT HAND)

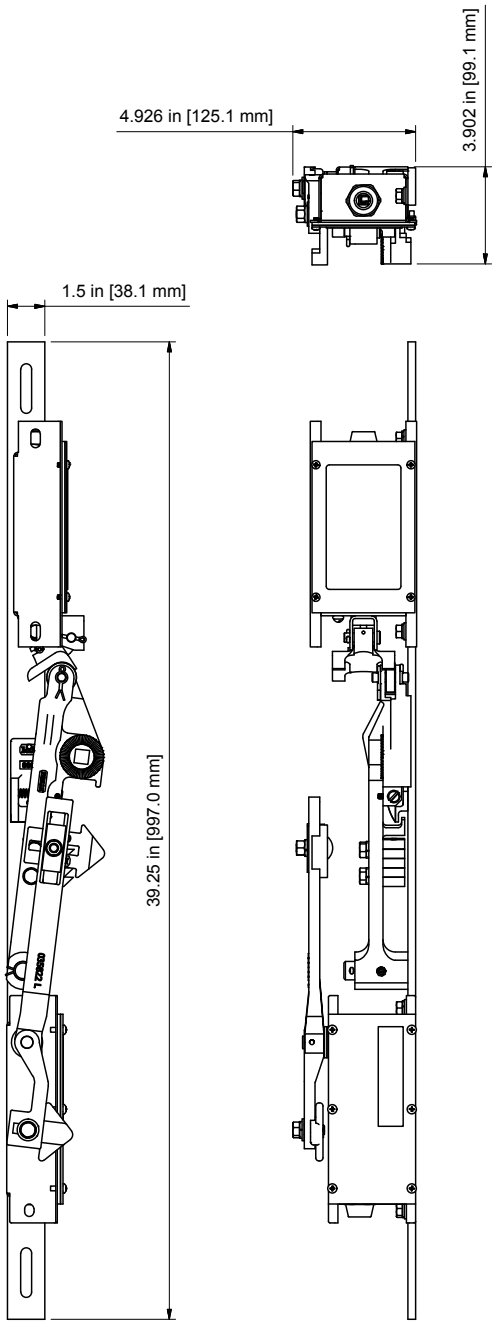

Left Hand Shown

Product Landing Door Locking Device For Use In Wet Locations

Part No. 2344-29R / 2344-29L

Aug 1/2017

Description
UB1A Interlock & Zone Switch

Intended for use with, manual or power operated vertically sliding freight elevator doors with retiring cams and an elevator door control system.

Actuation

Min Force required:	7 lbs / 31 N
Movement Required for actuation:	1 1/8 in / 30 mm
Voltage Rating:	220V AC/DC 2A
Level of protection:	NEMA 4X IP66 Equivalent
Weight:	-
Temperature Range:	-20°C to 40°C

CERTIFICATIONS

Certificate No. 1001129

Certificate No. 20150723-SA260

LISTED
475X

Certificate No. NL 98-400-1002-008-01

400

PA Certificate No. 1039
MEA No. 133-79-E

STANDARDS

ASME A17.1/CSA B44
EN81-1, EN81-2

ORDERING INFORMATION

2332-32R (RIGHT HAND)
2332-32L (LEFT HAND)

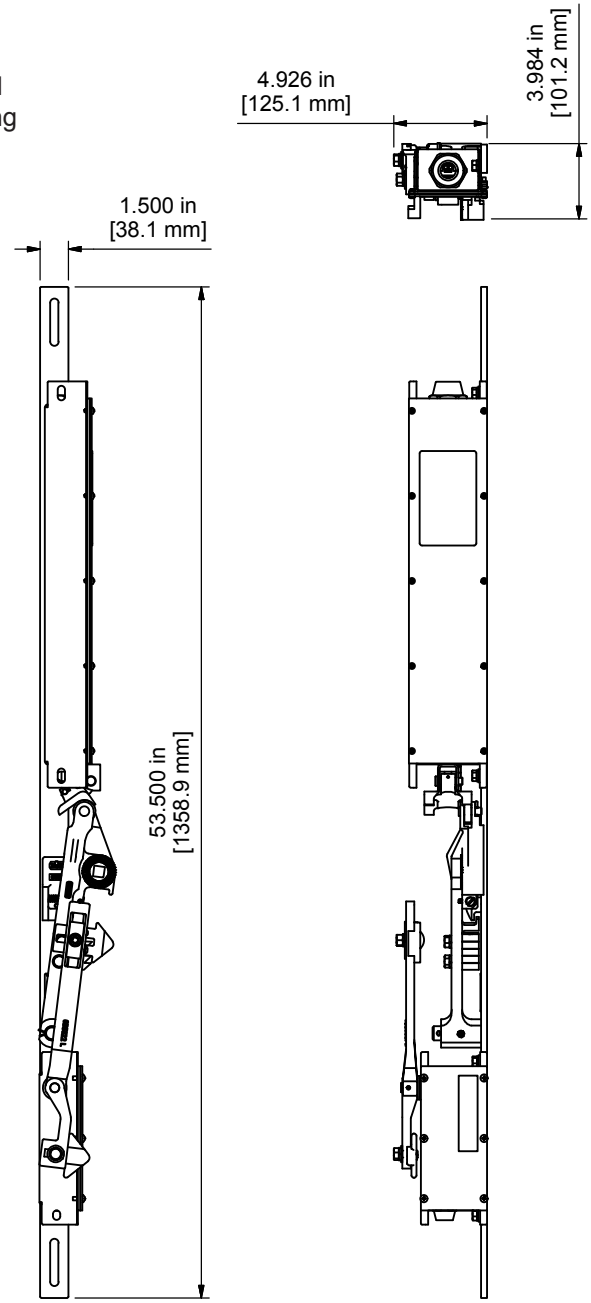

Left Hand Shown

Product Landing Door Locking Device For Use In Wet Locations

Part No. 2344-32R / 2344-32L

August 1/2017

Description
UB1A Interlock & Zone Switch

Intended for use with, manual or power operated vertically sliding freight elevator doors with retiring cams and an elevator door control system.

Actuation

Min Force required:	7 lbs / 31 N
Movement Required for actuation:	1 1/8 in / 30 mm
Voltage Rating:	220V AC/DC 2A
Level of protection:	NEMA 4X IP66 Equivalent
Weight:	-
Temperature Range:	-20°C to 40°C

CERTIFICATIONS

Certificate No. 1001129

Certificate No. 20150723-SA260

475X

Certificate No. NL 98-400-1002-008-01

400

PA Certificate No. 1039
MEA No. 133-79-E

STANDARDS

ASME A17.1/CSA B44
EN81-1, EN81-2

ORDERING INFORMATION

2332-32R (RIGHT HAND)
2332-32L (LEFT HAND)

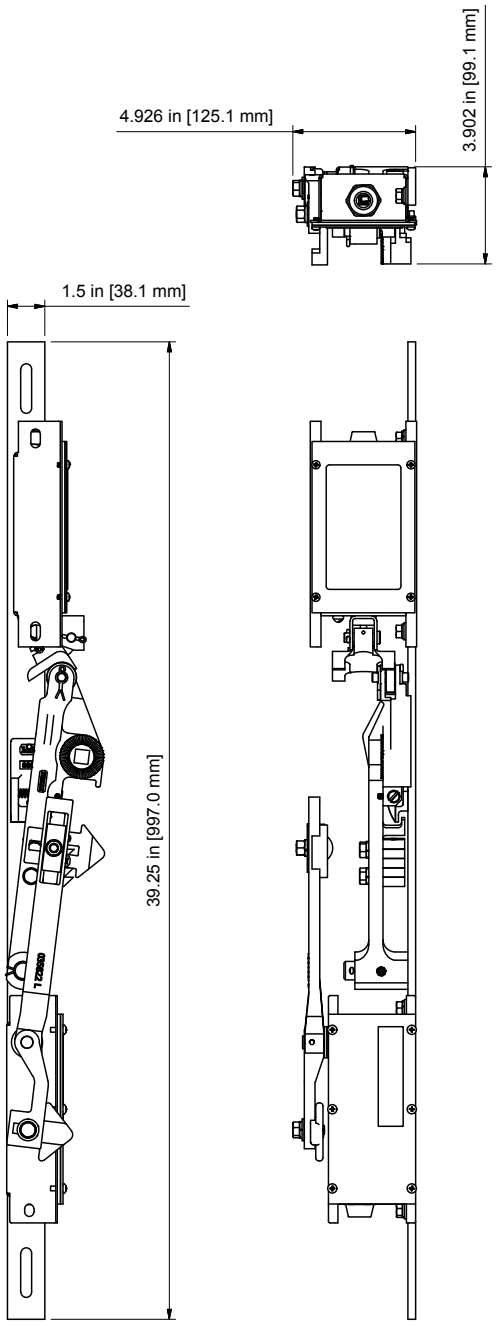

Left Hand Shown

Product Landing Door Locking Device For Use In Hazardous Locations

Part No. 23526R / 23526L

August 1/2017

Description
UB1E Interlock & Zone Switch

Intended for use with, manual or power operated vertically sliding freight elevator doors with retiring cams and an elevator door control system.

Actuation

Min Force required:	7 lbs / 31 N
Movement Required for actuation:	1 1/8 in / 30 mm
Voltage Rating:	220V AC/DC 2A
Level of protection:	Class I, Group D Class II, Groups F & G
Weight:	-

CERTIFICATIONS

Certificate No. 1341590

Certificate No. 20150723-E14595

Certificate No. NL 98-400-1002-008-01

STANDARDS

UL 1203
CSA B44-M90
EN81-1, EN81-2

ORDERING INFORMATION

2352-53R (RIGHT HAND)
2352-53L (LEFT HAND)

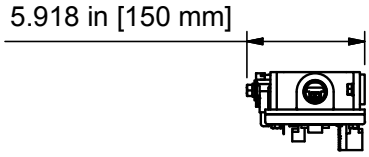

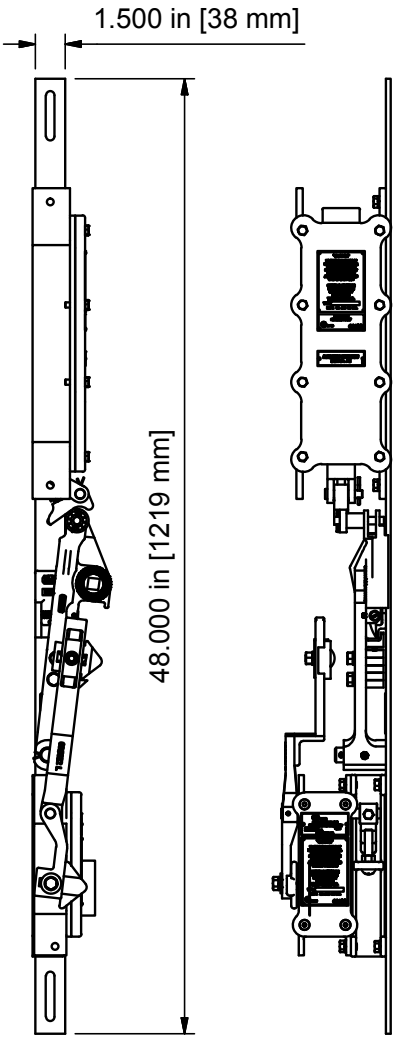

Left Hand Shown

195 Sandalwood Parkway W. Brampton ON L7A 1J6 ● +1 (905) 846 4545 ● Toll Free: 1 (800) 787 5020 ● Fax: 1 (846) 2161 ● ***PeelleDoor.com***

Product Landing Door Locking Device For Use In Hazardous Locations

Part No. 2352-53R / 2352-53L

August 1/2017

Description
UB1E Interlock & Zone Switch

Intended for use with, manual or power operated vertically sliding freight elevator doors with retiring cams and an elevator door control system.

Actuation

Min Force required:	7 lbs / 31 N
Movement Required for actuation:	1 1/8 in / 30 mm
Voltage Rating:	220V AC/DC 2A
Level of protection:	Class I, Group D Class II, Groups F & G
Weight:	-

CERTIFICATIONS

Certificate No. 1341590

Certificate No. 20150723-E14595

Certificate No. NL 98-400-1002-008-01

STANDARDS

UL 1203
CSA B44-M90
EN81-1, EN81-2

ORDERING INFORMATION

2352-53R (RIGHT HAND)
2352-53L (LEFT HAND)

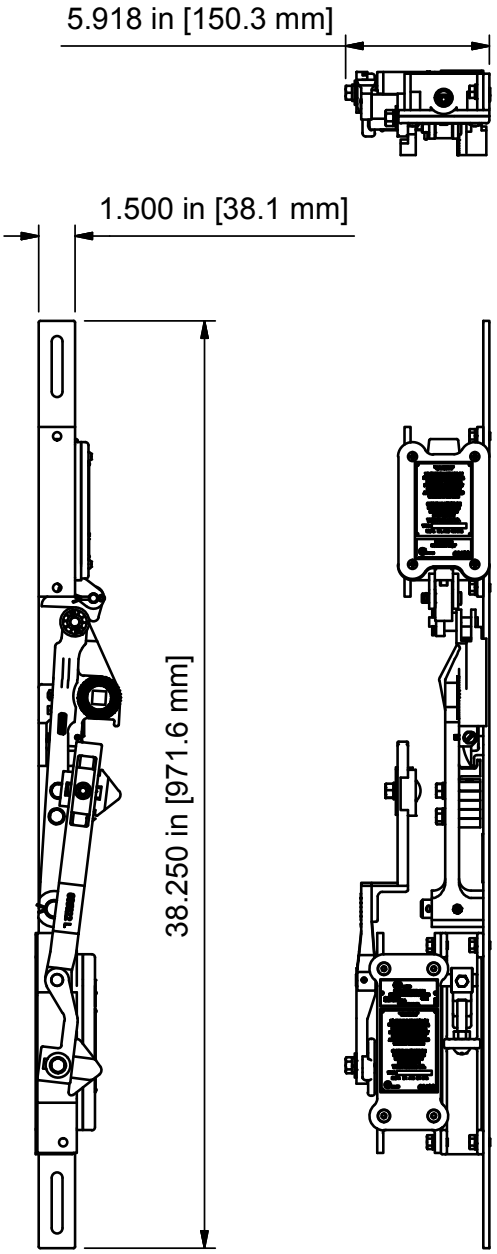

Left Hand Shown

To order more Safety Labels contact our Parts Department 905-846-4545 ex 218

PEELLE®

THE PEELLE COMPANY

FREIGHT DOORS | CAR GATES | CAR ENCLOSURES

TECHNICAL SUPPORT 1-800-787-5020 ext 275

Guide No. 252

INTERLOCK INSTALLATION & SETTINGS GUIDE

Date: Sept 20 / 2017